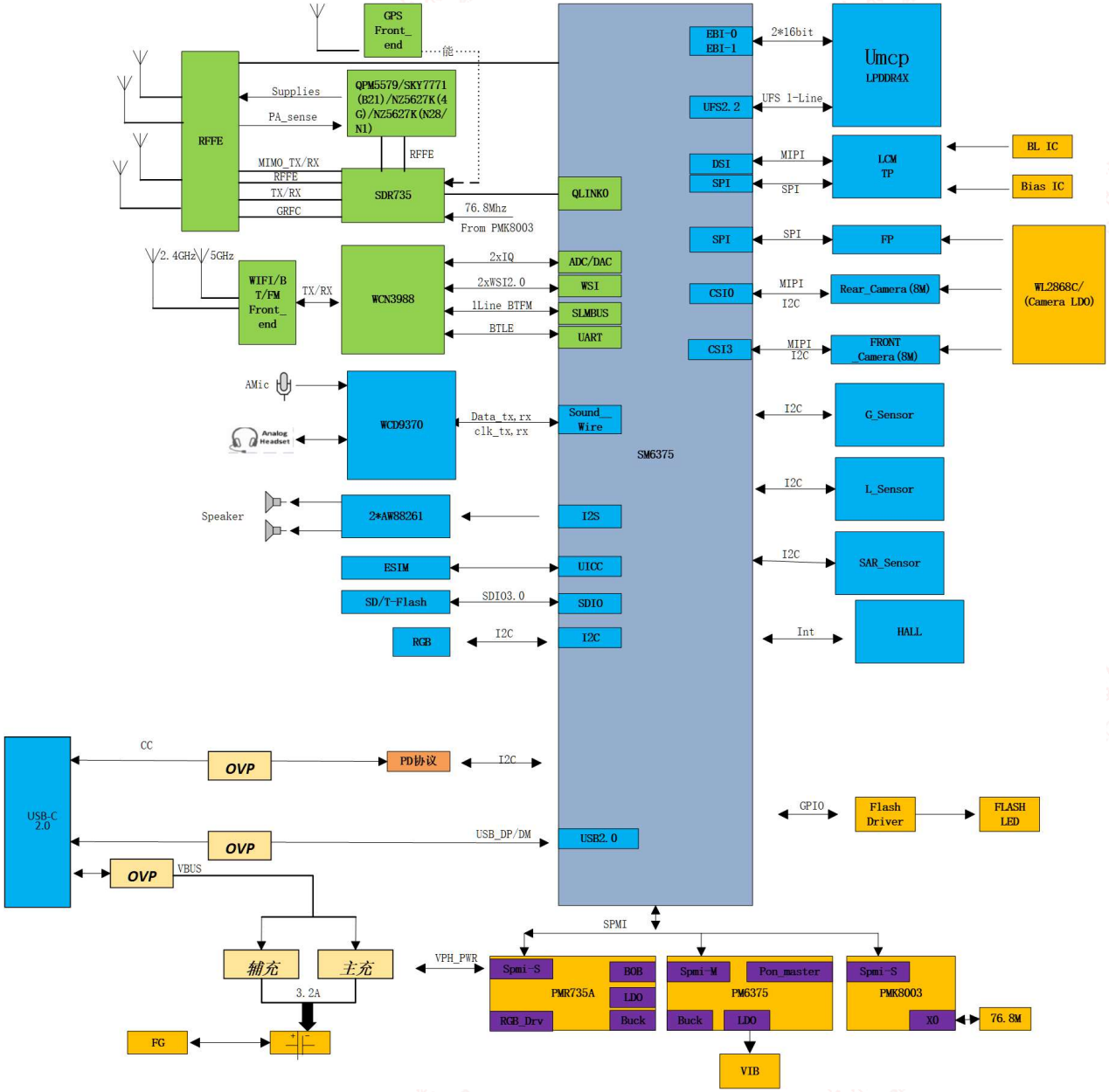

华勤通讯 Huaqin Telecom Technology Com.,Ltd		
Title	Block Diagram	
Size D	Project Block Diagram	Rev V1
Date: Thursday, August 25, 2022	Sheet 1 of 54	

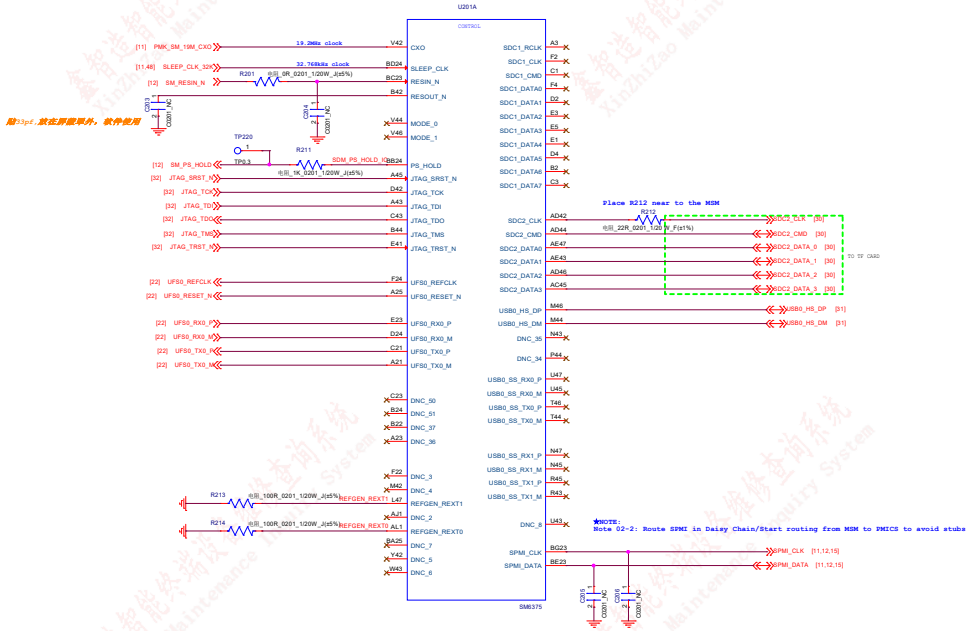

华勤通讯 Huaqin Telecom Technology Com.,Ltd			
Title	SM6375_Control		
Size D	Project <Doc>		Rev V1
Date: Thursday, August 25, 2022		Sheet 2 of 54	

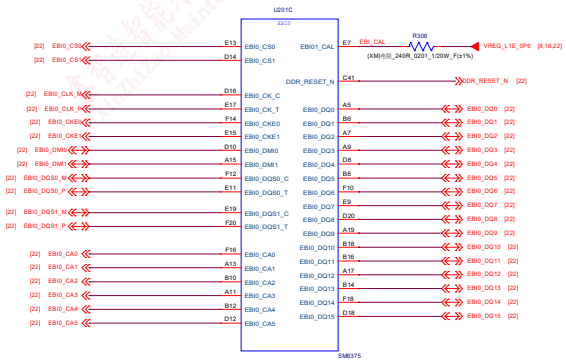

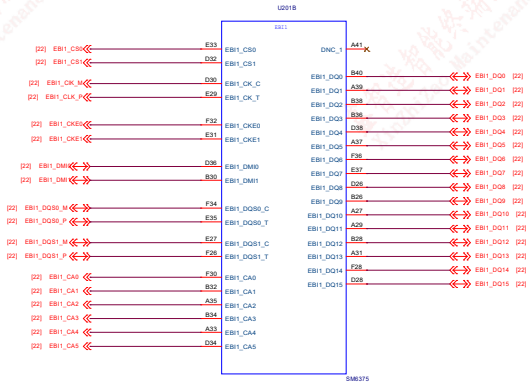

华勤通讯 Huaqin Telecom Technology Com.,Ltd		
Title	SM6375_LPDDR4x	
Size D	Project <Doc>	Rev V1
Date: Thursday, August 25, 2022	Sheet 3 of 54	

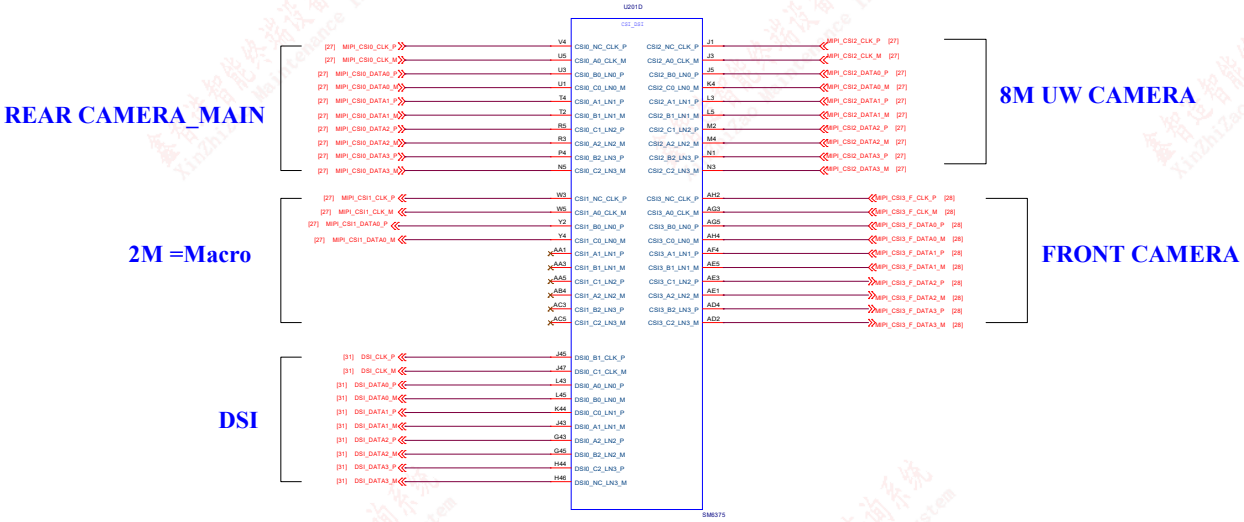

华勤通讯 Huaqin Telecom Technology Com.,Ltd		
Title SM6375_CSI/DSI		
Size D	Project <Doc>	Rev V1
Date: Thursday, August 25, 2022	Sheet 4 of 55	

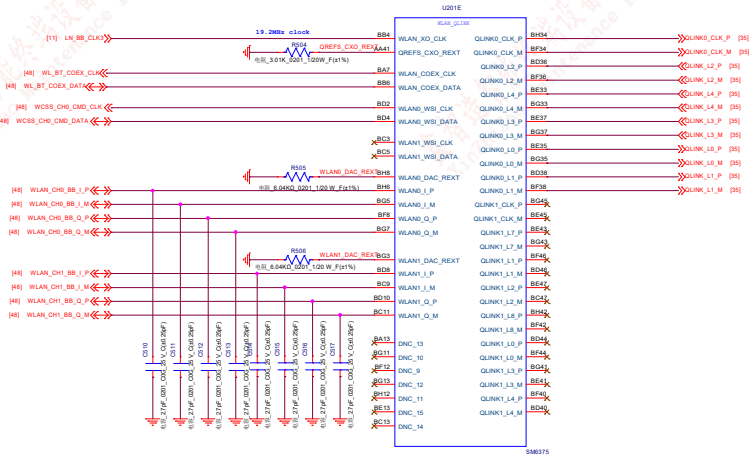

华勤通讯 Huaqin Telecom Technology Com.,Ltd			
Title	SM6375_WLAN/QLINK		
Size D	Project <Doc>		Rev V1
Date: Thursday, August 25, 2022		Sheet 5 of 54	

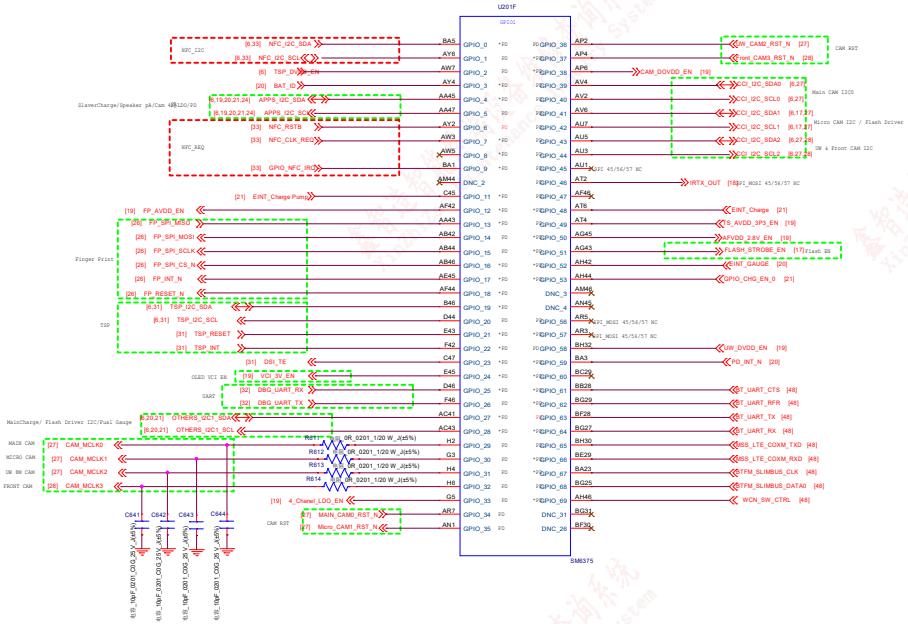

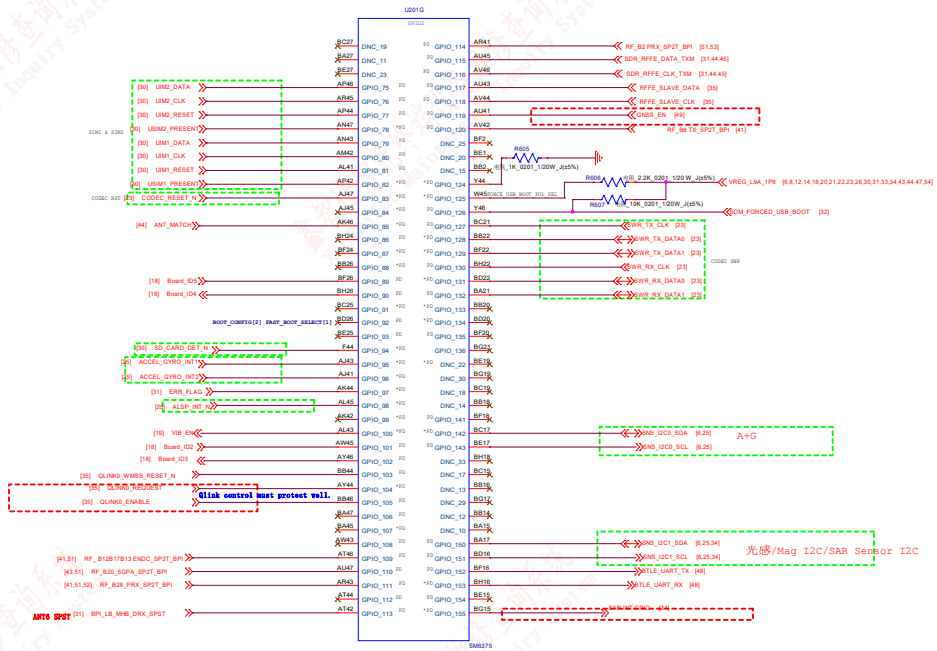

I2C_PULL_UP

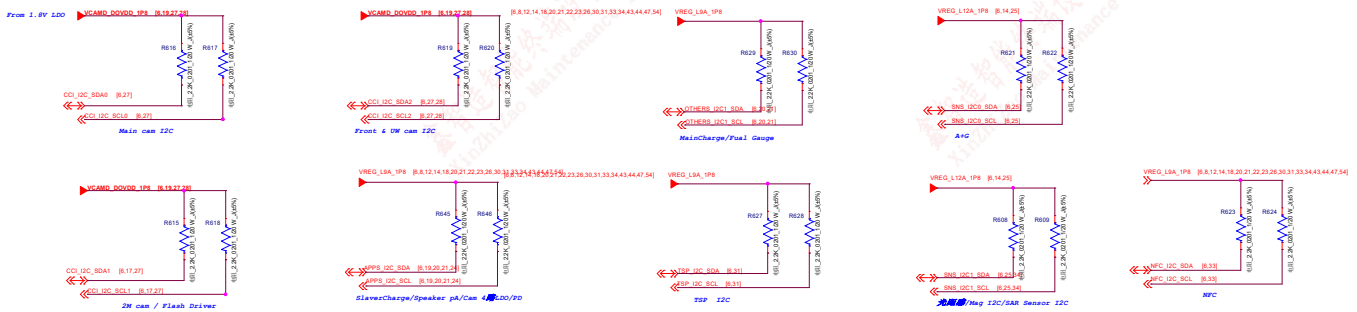

Schematic design notice of "06_SM6350_GPIO"

Note 06-1: NO external Pull-up on the GPIOS (GPIO_117, GPIO_119,GPIO_120, GPIO_103, GPIO_106, GPIO_113, GPIO_51,GPIO_50)

Note 06-2: FAST_BOOT_SEL【2：0】

FAST_BOOT_SEL[2:0]	Boot options
0b000	UFS HS G1 -> SD -> eDL (eDL path- USB only)
0b001	SD -> UFS HS G1-> eDL (eDL path USB only)
0b010	USB -> eDL (eDL path- SD then USB)
0b011	eMMC -> SD -> eDL (eDL path- USB only)
0b100	SD -> eMMC -> eDL (eDL path USB only)
0b101	UFS HS G1 -> SD -> eDL (eDL path- USB only)
0b110	UFS HS G1-> SD -> eDL(eDL path-USB only)
0b111	eMMC -> eDL (eDL path – USB only)

华勤通讯 Huaqin Telecom Technology Com.,Ltd		
Title: SM6375_GPIO		
Size: D	Project: <Doc>	Rev: V1
Date: Thursday, August 25, 2022	Sheet 6 of 55	

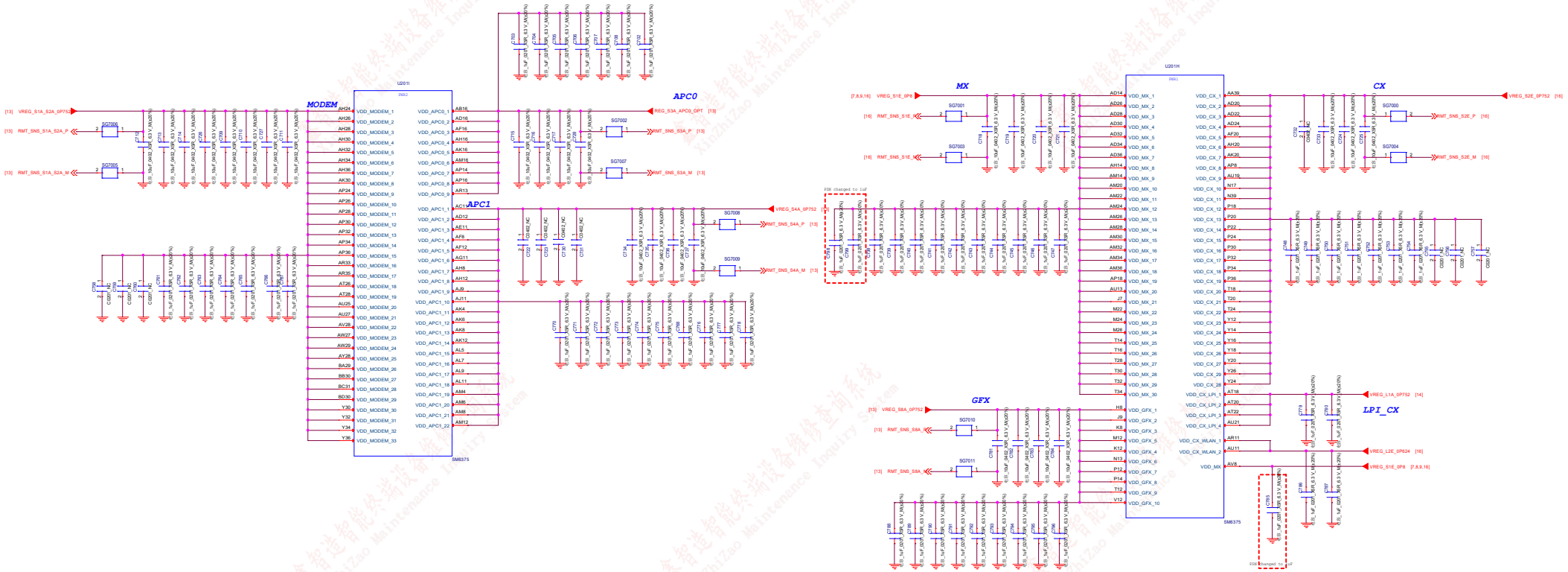

华勤通讯 Huaqin Telecom Technology Com.,Ltd

Title	SM6375_PWR1	
Size D	Project <Doc>	Rev V1
Date: Thursday, August 25, 2022	Sheet 7 of 54	

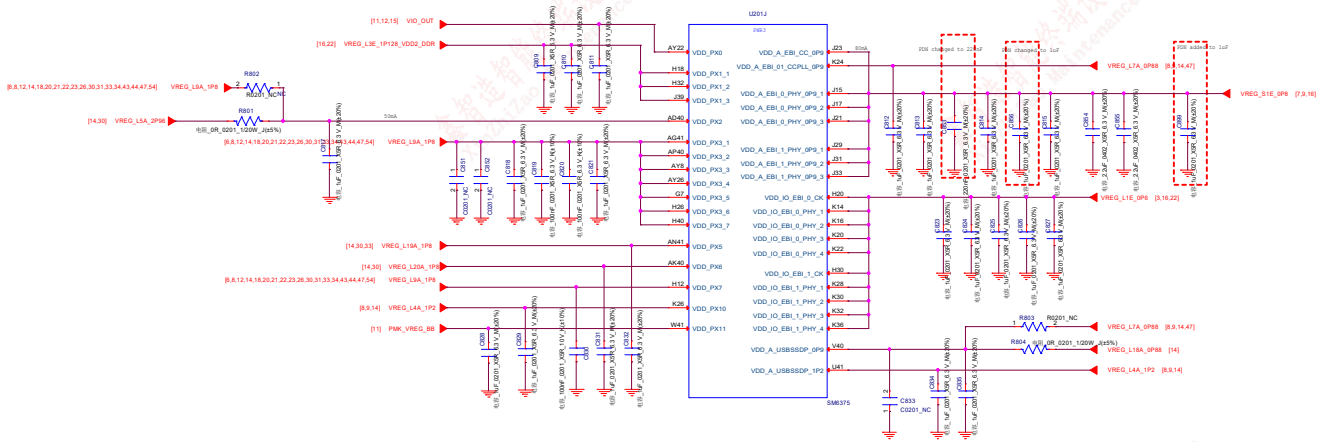

华勤通讯 Huaqin Telecom Technology Com.,Ltd		
Title	SM6375_PWR2	
Size D	Project <Doc>	Rev V1
Date: Thursday, August 25, 2022	Sheet 8 of 54	

SM6375_PWR3

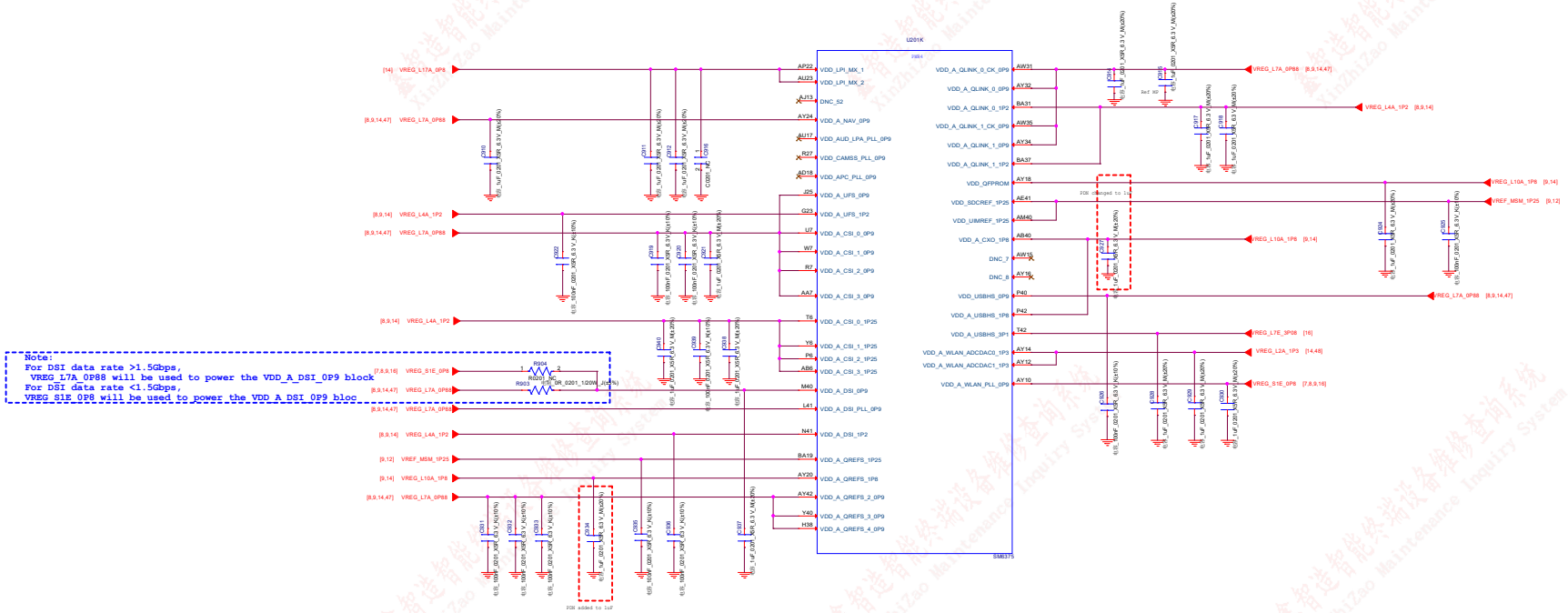

华勤通讯 Huaqin Telecom Technology Com.,Ltd		
Title	SM6375_PWR3	
Size D	Project <Doc>	Rev V1
Date: Thursday, August 25, 2022	Sheet 9 of 54	

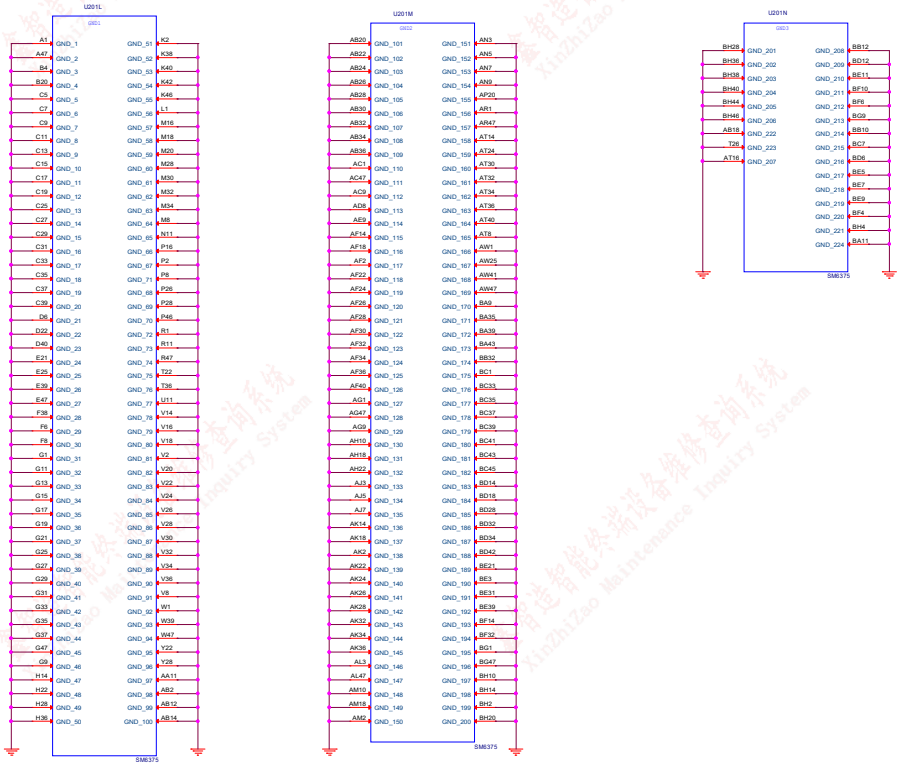

华勤通讯 Huaqin Telecom Technology Com.,Ltd		
Title	SM6375_GND	
Size D	Project <Doc>	Rev V1
Date: Thursday, August 25, 2022	Sheet 10 of 54	

PMK8003

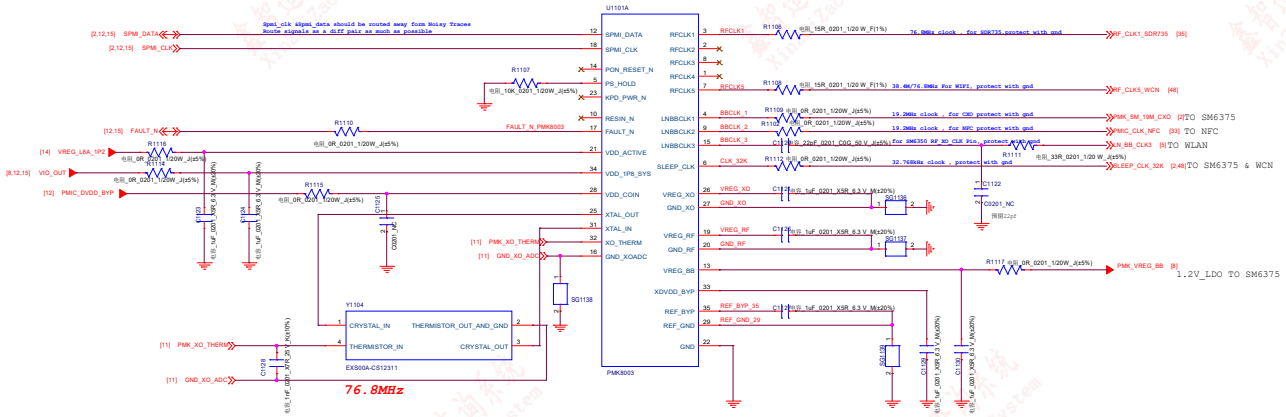

PMK8003

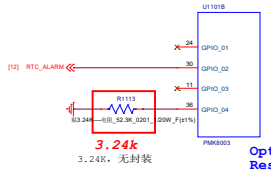

Option pin state for SM6375, SM4350-AC
Resistor value (Ω) 1% accuracy
GPIO_4:3240Ω

3.7.1 Option hardwired controls

The GPIO_04 termination defines the boot up behavior of the PMIC. The configuration for various chipsets is shown in Table 3-20 and Table 3-21.

Table 3-20 Option pin state for SM7225, SM6350, and SM4350

Resistor value (Ω) 1% accuracy	Boot options
52300	No SD card boot
88700	SD card boot

Table 3-21 Option pin state for SM6375, SM4350-AC

PMK8003 Pin name	Resistor value (Ω) 1% accuracy
GPIO_4	3240

NOTE: GPIO_04 is not an option pin for SM7250 + SDR735, SM8250 + SDR735, and SDX57 chipsets.

华勤通讯 Huaqin Telecom Technology Com.,Ltd		
Title	PMK8003_CLK	
Size D	Project <Doc>	Rev V1
Date: Thursday, August 25, 2022	Sheet 11 of 55	

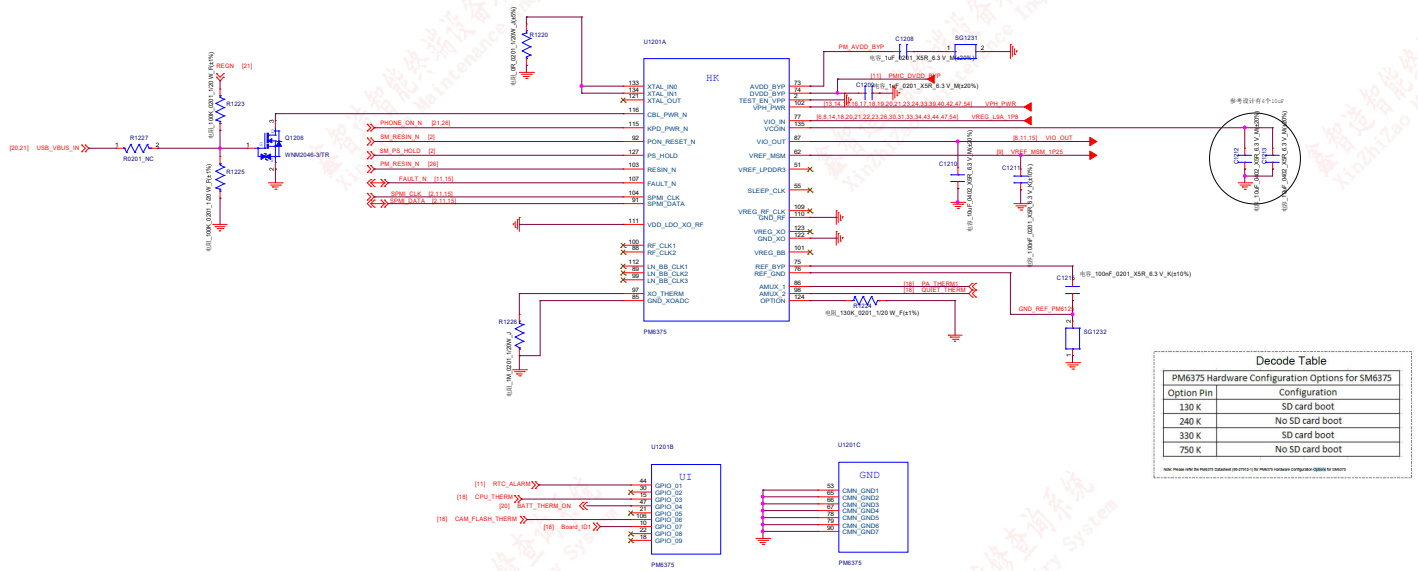

Decode Table

PM6375 Hardware Configuration Options for SM6375	
Option Pin	Configuration
130 K	SD card boot
240 K	No SD card boot
330 K	SD card boot
750 K	No SD card boot

Note: Please refer the PM6375 Datasheet (80-P7512-1) for PM6375 Hardware Configuration Options for SM6375

华勤通讯 Huaqin Telecom Technology Com.,Ltd		
Title	PM6375_CTRL/AMUX/GPIO/GND	
Size D	Project <Doc>	Rev V1
Date: Thursday, August 25, 2022	Sheet 12 of 54	

PM6375 BUCKs

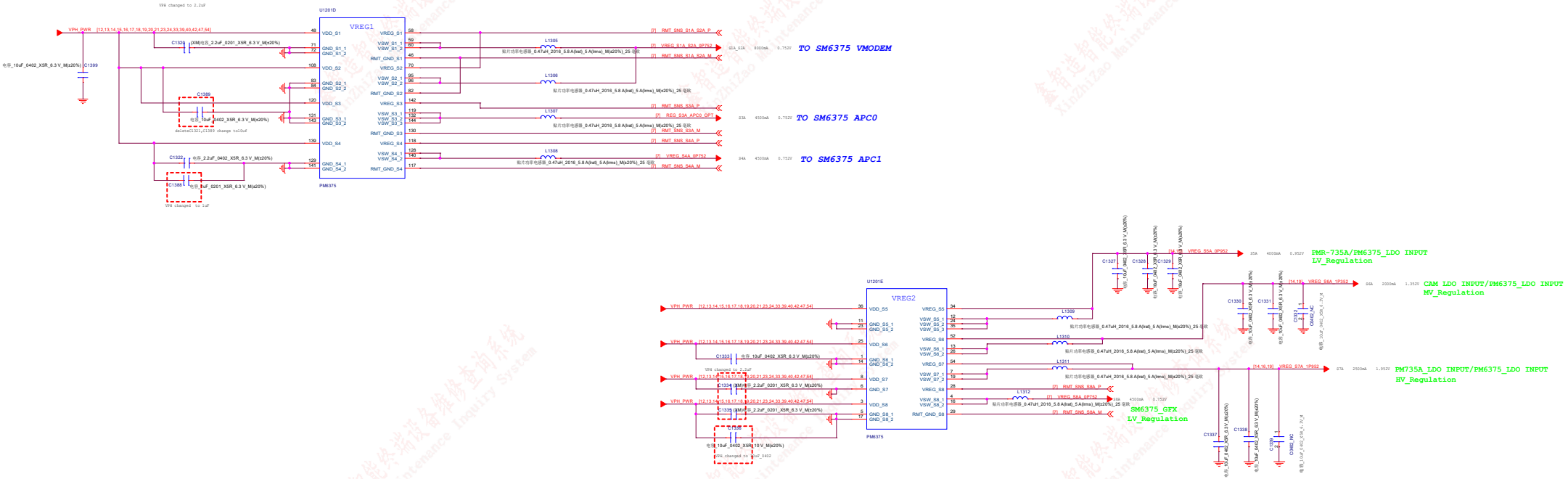

华勤通讯 Huaqin Telecom Technology Com.,Ltd		
Title	PM6375_BUCKS	
Size D	Project <Doc>	Rev V1
Date: Thursday, August 25, 2022	Sheet 13 of 55	

PM6375 LDO

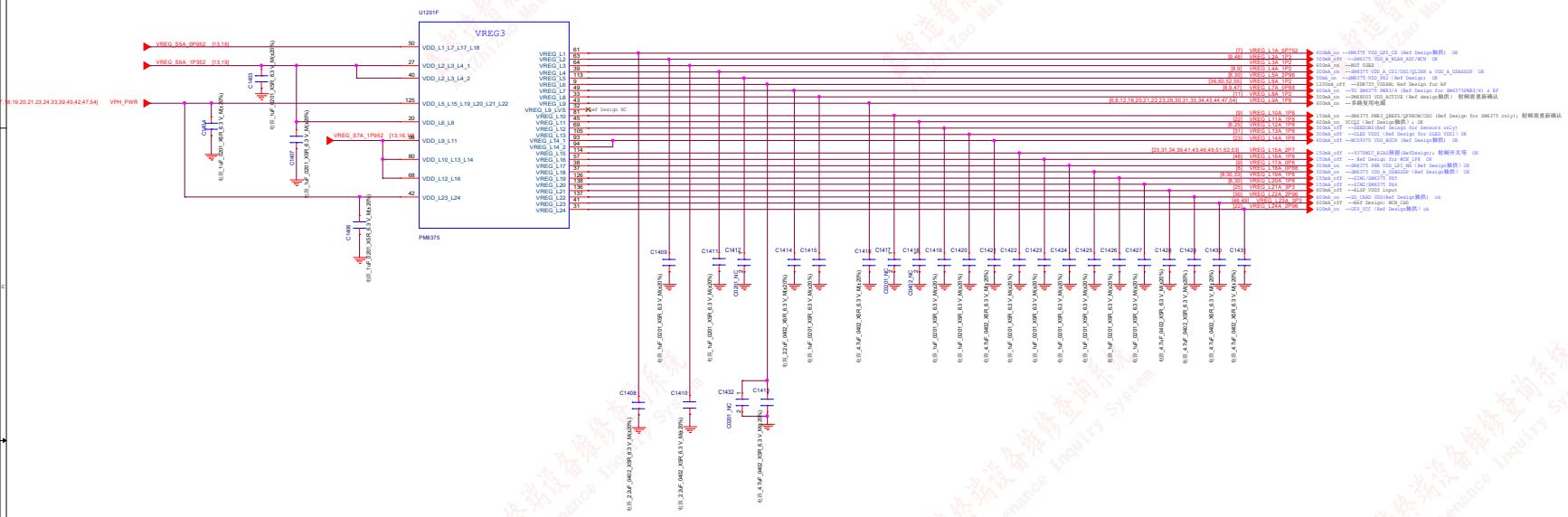

华勤通讯 Huaqin Telecom Technology Com.,Ltd		
Title	PM6375_LDOS	
Size D	Project <Doc>	Rev V1
Date: Thursday, August 25, 2022	Sheet 14 of 55	

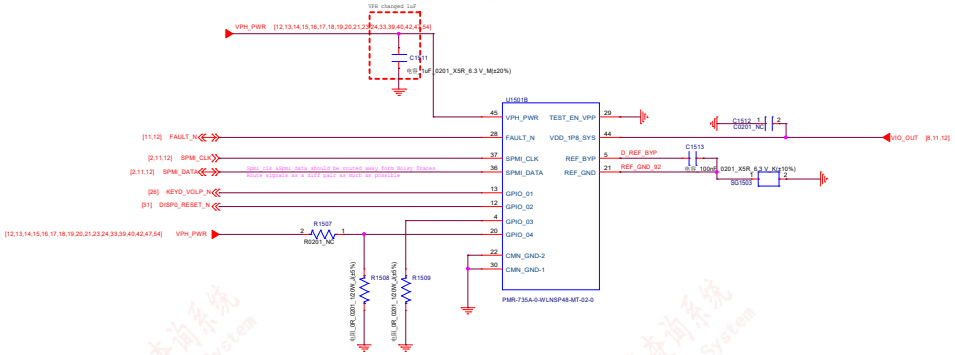

华勤通讯 Huaqin Telecom Technology Com.,Ltd		
Title PMR-735A_CTRL/GPIO		
Size D	Project <Doc>	Rev V1
Date: Thursday, August 25, 2022	Sheet 15 of 54	

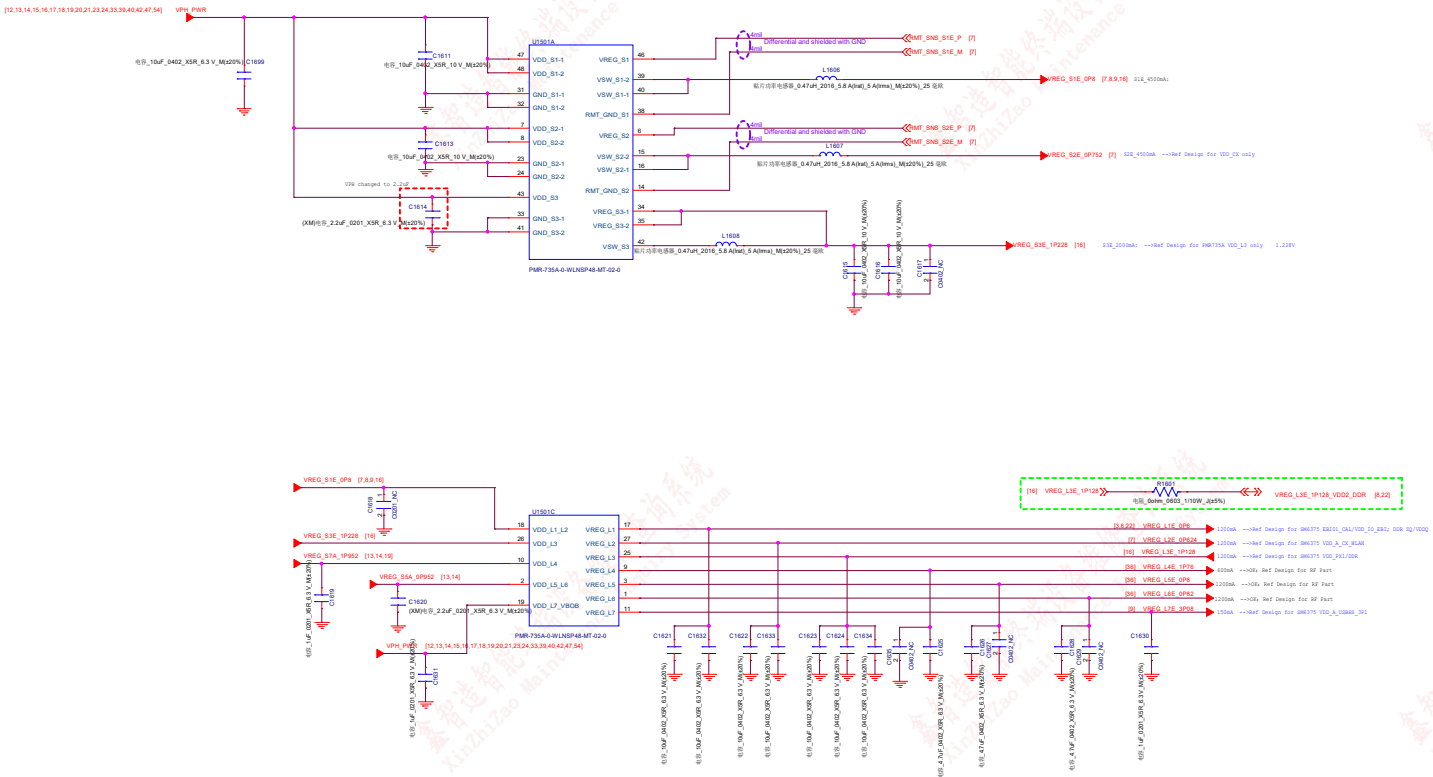

华勤通讯 Huaqin Telecom Technology Com.,Ltd		
Title	PMR-735A_BUCKS/LDO	
Size D	Project <Doc>	Rev V1
Date: Thursday, August 25, 2022	Sheet 16 of 54	

Flash LED Driver

国内：贴R1706, LED1701,ANT NC; 国际: R1706 NC, LED1701 NC, ANT1761/1764上件

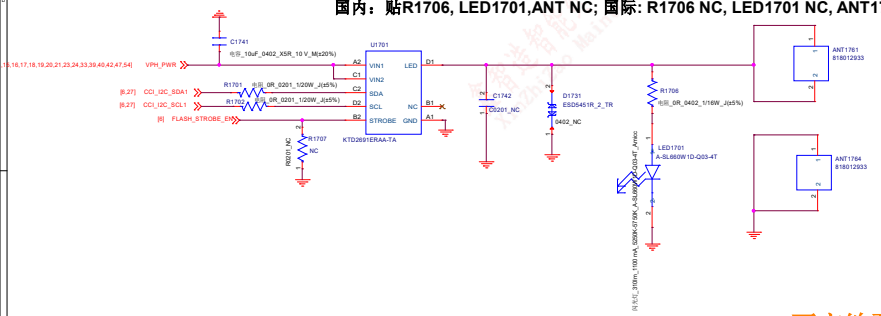

Flash下方地要完整且足够大，散热一定要好

OLED Driver

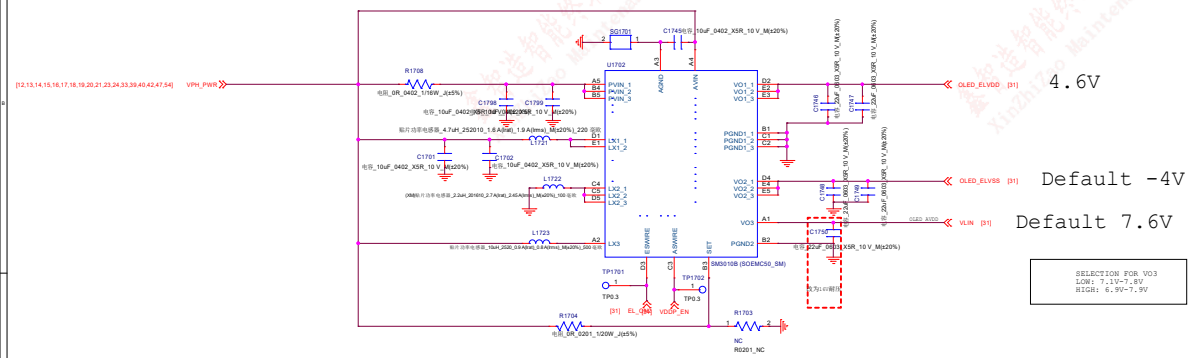

华勤通讯 Huaqin Telecom Technology Com.,Ltd		
Title	17.LCM_BIAS/Flash DRIVER	
Size D	Project <Doc>	Rev V1
Date: Thursday, August 25, 2022	Sheet 17 of 55	

NTC

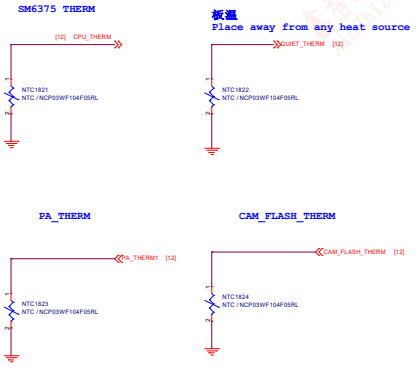

Board ID

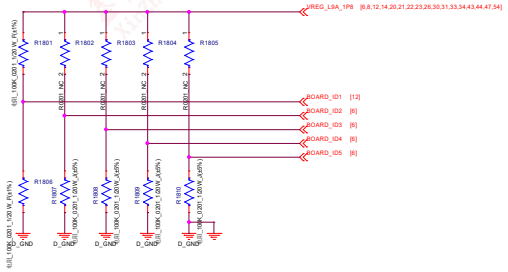

IR_LED

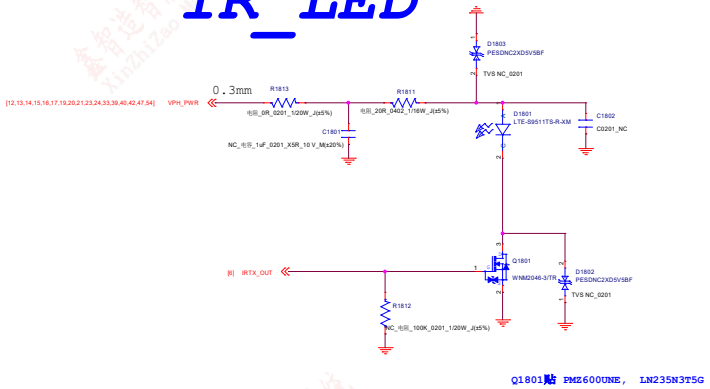

华勤通讯 Huaqin Telecom Technology Com.,Ltd		
Title	Thermal_NTC	
Size D	Project <Doc>	Rev V1
Date: Thursday, August 25, 2022	Sheet 18 of 54	

CAMERA LDO

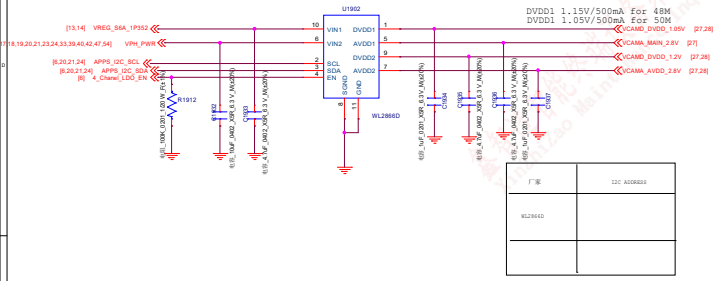

厂家	I2C ADDRESS
WL2866D	

TSP POWER LDO_3.3V

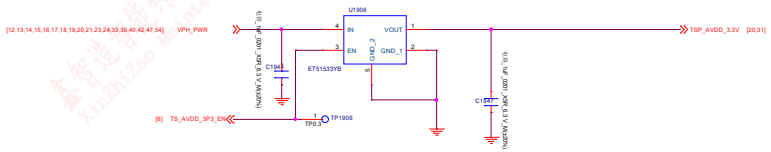

VIB LDO_3V

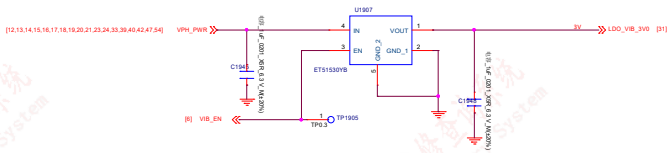

CAM AFVDD LDO_2.8V

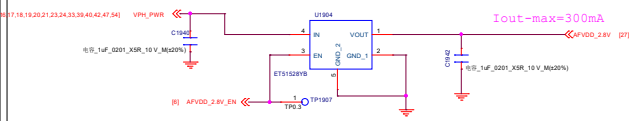

FingerPrint LDO_3V

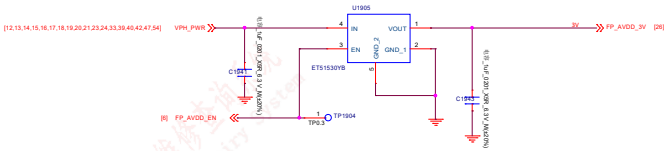

CAM DOVDD 1.8V

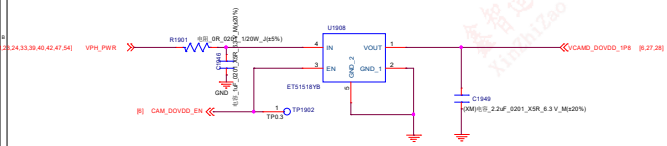

OLED VCI 3V

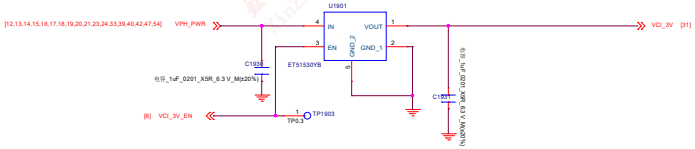

UW 8M DVDD 1.2V

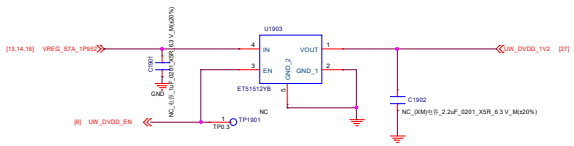

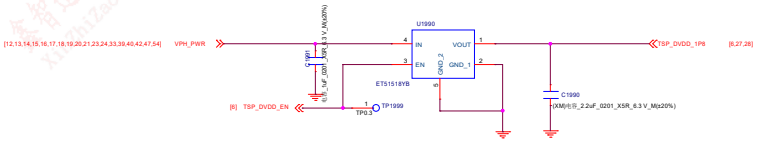

华勤通讯 Huaqin Telecom Technology Com.,Ltd		
Title Power_External		
Size D	Project <Doc>	Rev V1
Date: Thursday, August 25, 2022	Sheet 19 of 55	

BATTERY CONNECTOR

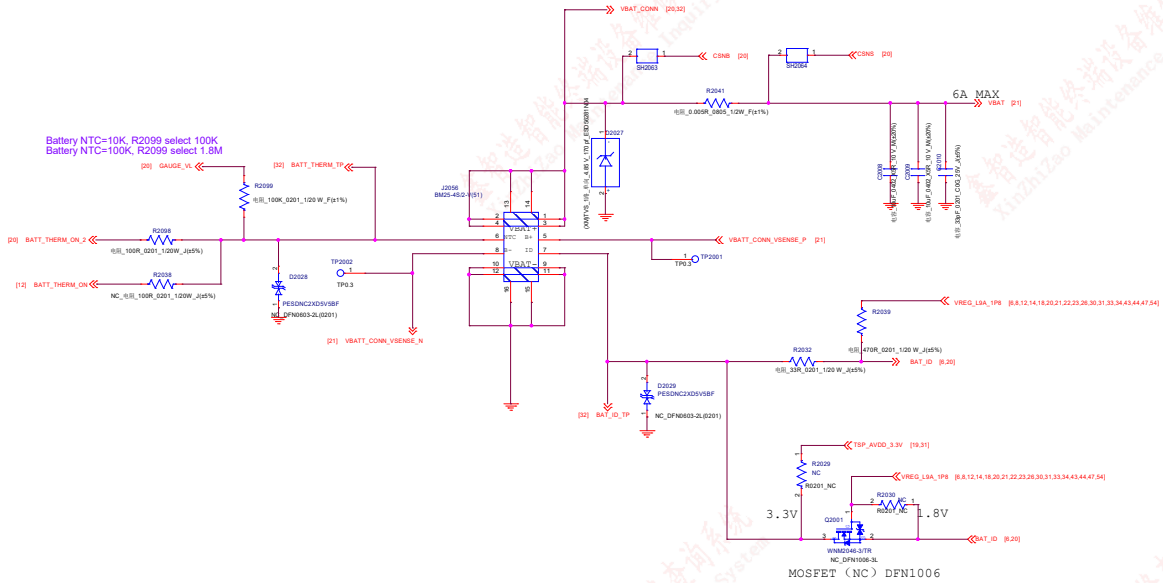

PD协议

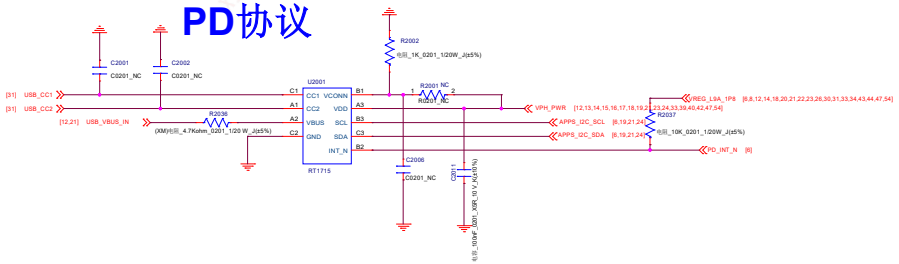

Fuel Gauge

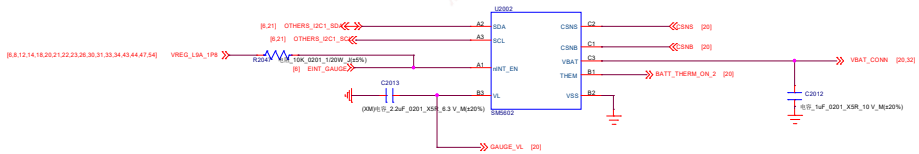

华勤通讯 Huaqin Telecom Technology Com.,Ltd		
Title BATT/PD		
Size D	Project <Doc>	Rev V1
Date: Thursday, August 25, 2022	Sheet 20 of 55	

SW Charger

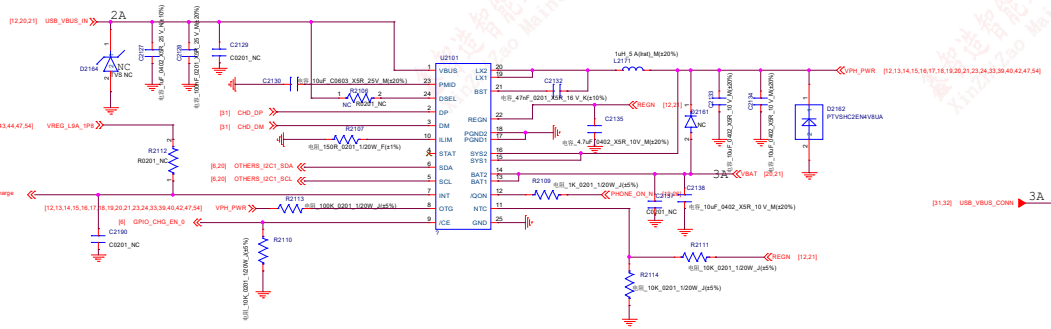

供号	型号	I2C ADDRESS
一供		
二供		

Slaver_Charger

R2108可NC,地址需更改为0x66

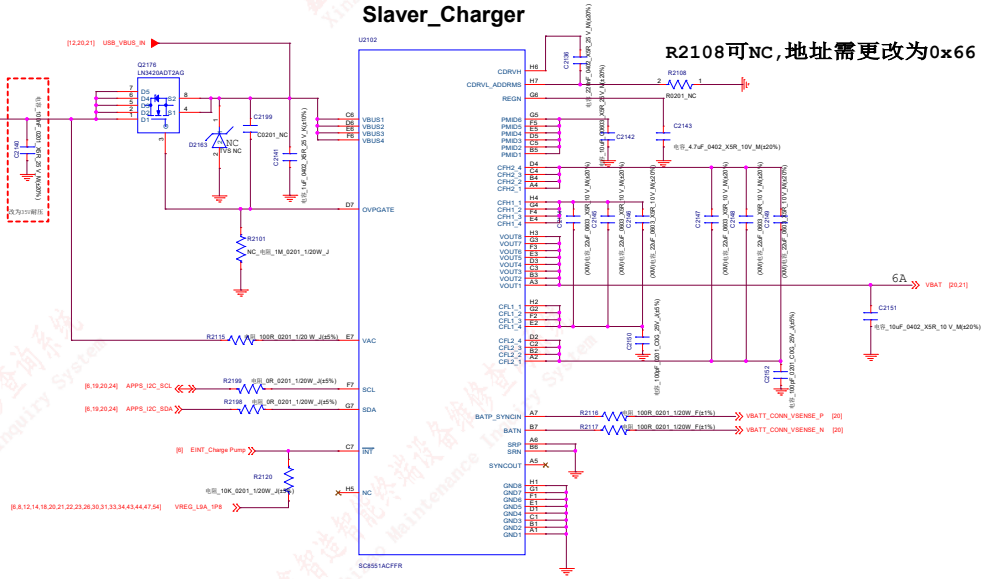

供号	型号	I2C ADDRESS
一供		
二供		

华勤通讯 Huaqin Telecom Technology Com.,Ltd		
Title: Slaver_Charger_BQ25892		
Size: D	Project: <Doc>	Rev: V1
Date: Thursday, August 25, 2022	Sheet 21 of 54	

UFS2.2+LPDDR4x

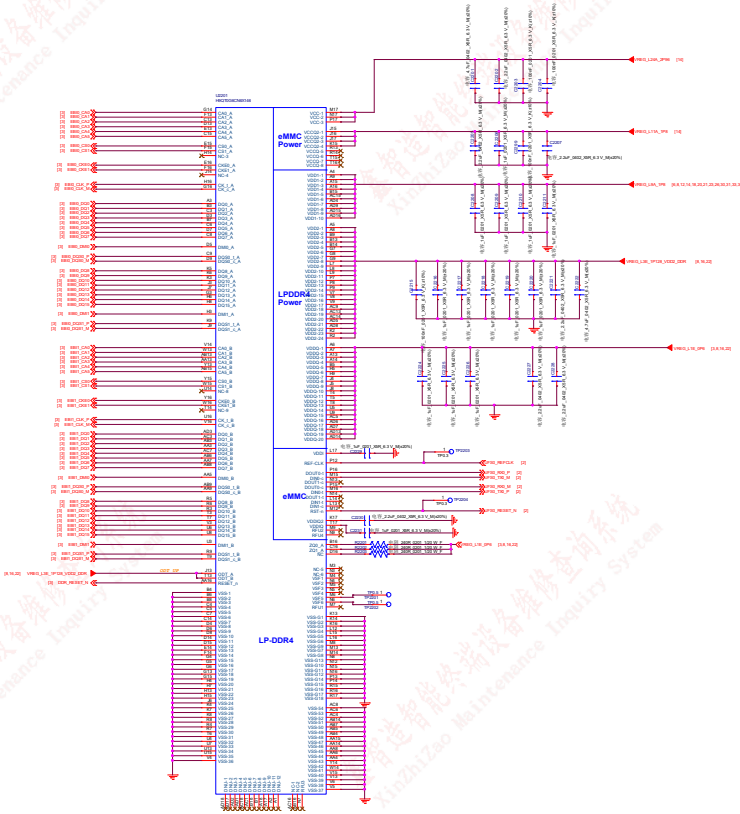

华勤通讯 Huaqin Telecom Technology Com.,Ltd		
Title 22_Memory_uMCP		
Size E	Project M17_MB_V0.1	Rev V1
Date: Thursday, August 25, 2022	Sheet 22 of 55	

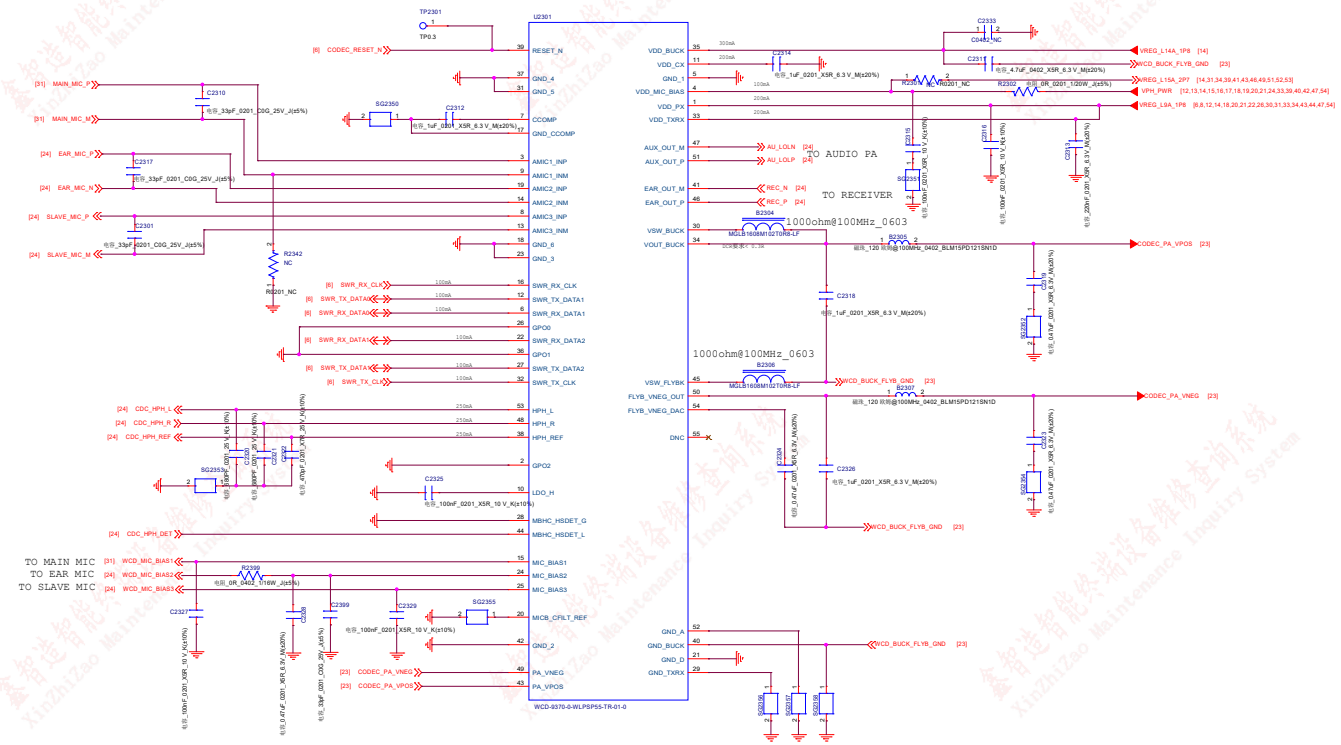

华勤通讯 Huaqin Telecom Technology Com.,Ltd		
Title	AUDIO_CODEC_WCD9370	
Size D	Project <Doc>	Rev V1
Date: Thursday, August 25, 2022	Sheet 23 of 54	

Earphone Microphone

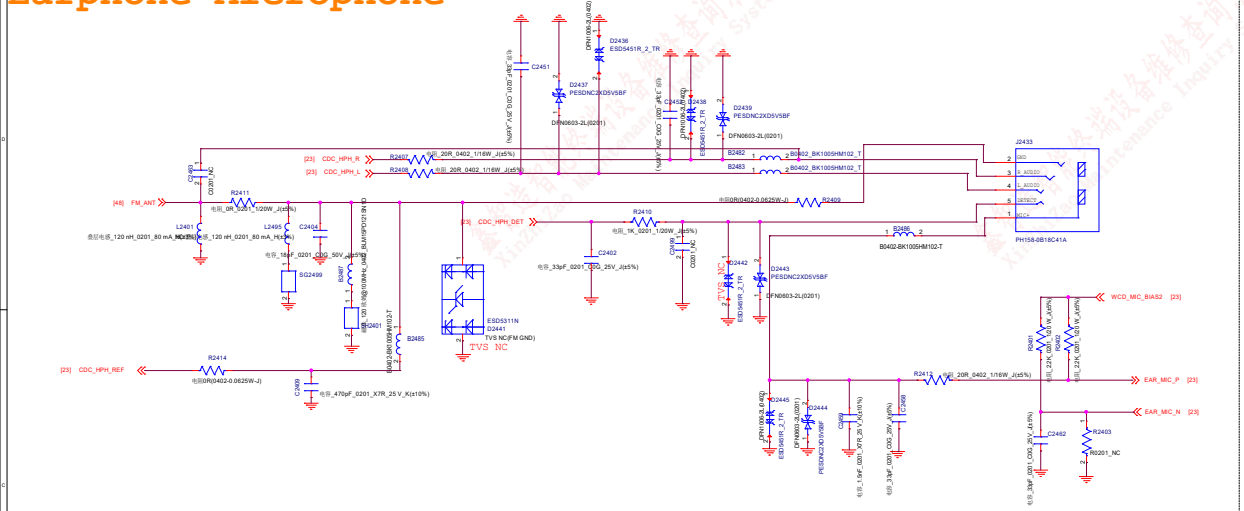

Sub MIC

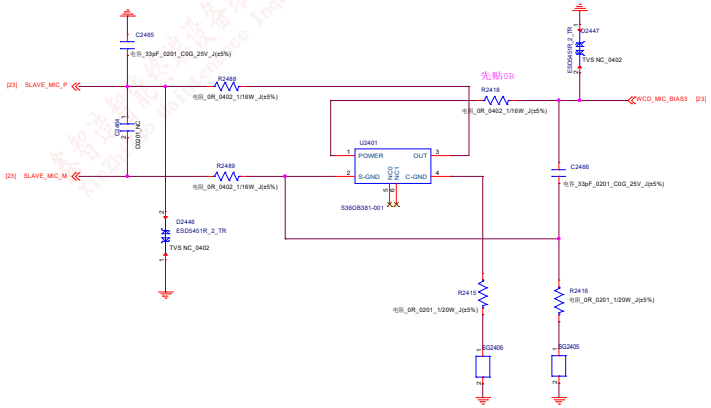

SPEAKER PA

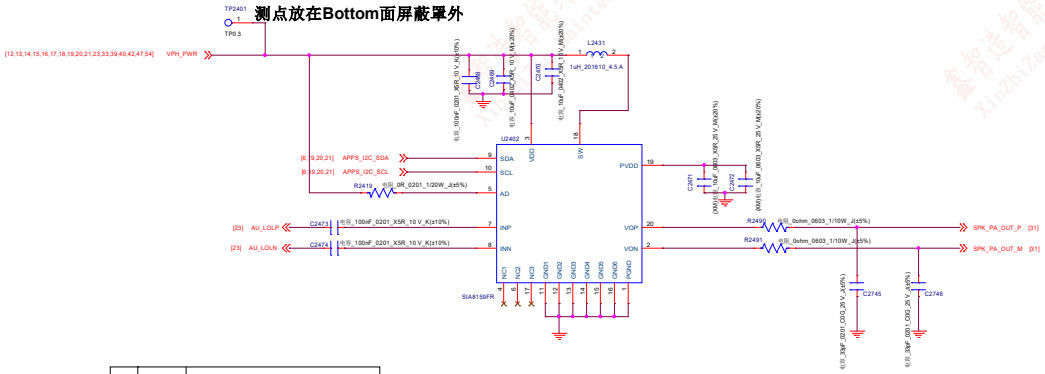

供号	型号	I2C ADDRESS
一供	SIA8159FR	0x29 (AD Pin connected to VDD)
二供		

RECIVER

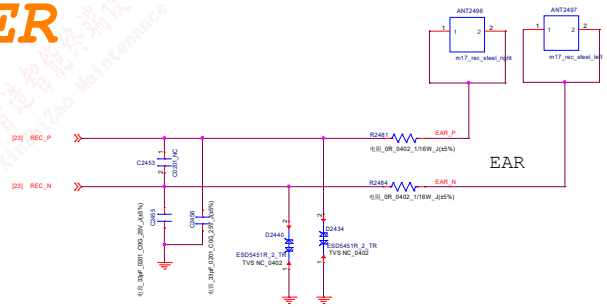

华勤通讯 Huaqin Telecom Technology Com.,Ltd		
Title	EARPHONE/MIC/RCV/SPK	
Size D	Project <Doc>	Rev V1
Date: Thursday, August 25, 2022	Sheet 24 of 55	

eCOMPASS

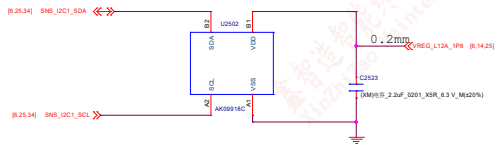

M-Sensor

厂家	I2C ADDRESS
AK09918C	

A + Gyro sensor

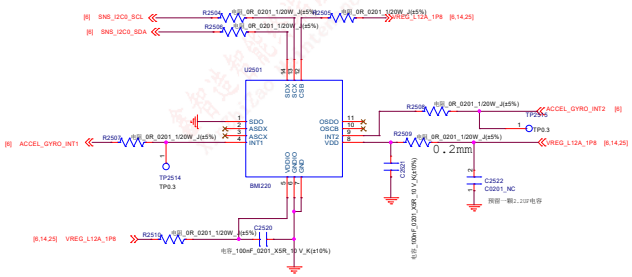

光距感

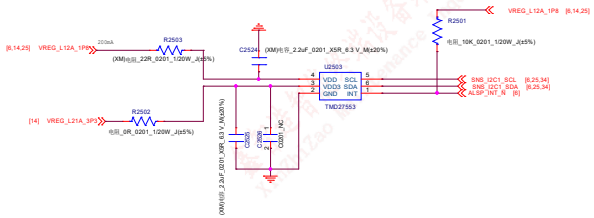

供号	型号	I2C ADDRESS
一供	TSL25223	0x39
二供		

华勤通讯 Huaqin Telecom Technology Com.,Ltd		
Title	SENSOR_RGB	
Size D	Project <Doc>	Rev V1
Date: Thursday, August 25, 2022	Sheet 25 of 55	

Finger Print

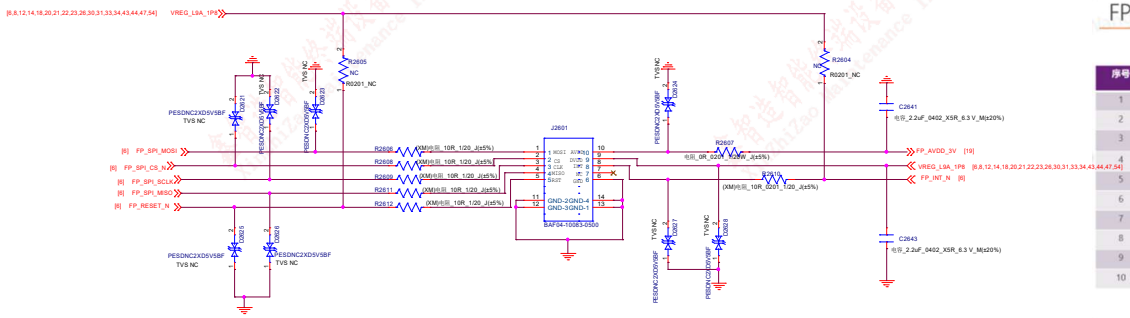

FP

序号	模组	主板
1	MOSI	MOSI
2	AVDD_3.3V(max)	AVDD_3.3V(max)
3	CS	CS
4	DVDD_1.8V	DVDD_1.8V
5	CLK	CLK
6	INT	INT
7	MISO	MISO
8	OTP	NC
9	RST	RST
10	GND	GND

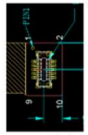

模组比线方式1

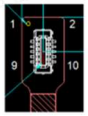

模组比线方式2

KEY BTB

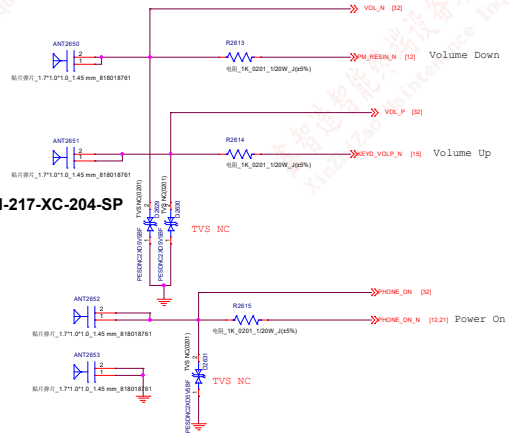

侧键弹片*4：一供：818018761；二供：XM-217-XC-204-SP

华勤通讯 Huaqin Telecom Technology Com.,Ltd			
Title	FP/KEY		
Size D	Project <Doc>		Rev V1
Date: Thursday, August 25, 2022		Sheet 26 of 55	

Main MONO Camera 50M

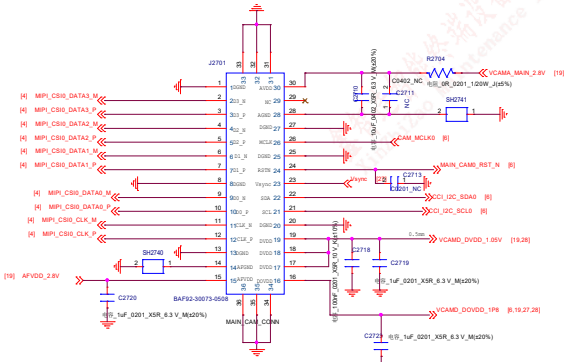

独供：BAF92-30073-0508

广角UW 8M；兼容2M景深

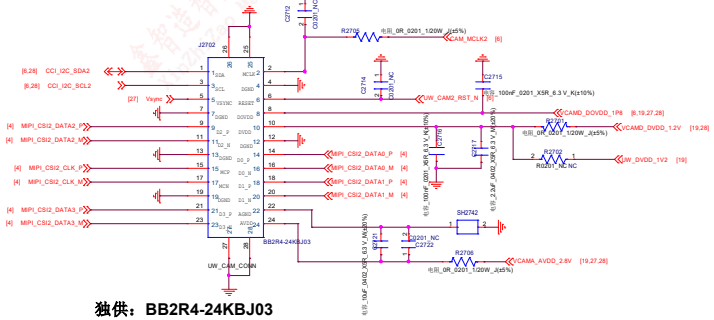

独供：BB2R4-24KBJ03

微 距 Camera 2M

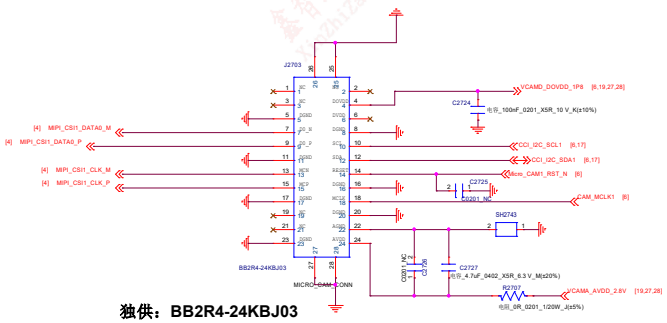

独供：BB2R4-24KBJ03

华勤通讯 Huaqin Telecom Technology Com.,Ltd		
Title REAR_CAM		
Size D	Project <Doc>	Rev V1
Date: Thursday, August 25, 2022	Sheet 27 of 54	

Front Camera - 8M；兼容13M

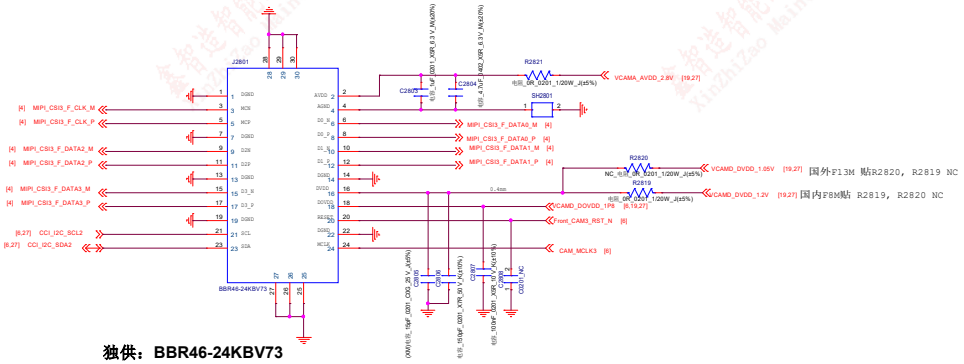

独供：BBR46-24KBV73

standard					
13M_3L6					
1					
3	DGND		2	AVDD	2.8V
5	MCN		4	AGND	
7	MCP		6	D0_N	
9	DGND		8	D0_P	
11	D2_N		10	D1_N	
13	D2_P		12	D1_P	
15	DGND		14	DGND	
17	D3_N		16	DVDD	1.05V
19	D3_P		18	DOVDD	1.8V
21	DGND		20	RESET	
23	SCL		22	DGND	
24	SDA		24	MCLK	

Note:
1、国际版POCO、印度POCO
2、8M与13M做兼容

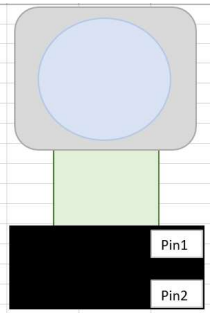

Note: 1. 此为connector朝上
2. connector与Lens同侧

华勤通讯 Huaqin Telecom Technology Com.,Ltd		
Title FRONT_CAM		
Size D	Project <Doc>	Rev V1
Date: Thursday, August 25, 2022	Sheet 28 of 54	

鑫智造智能终端设备维修查询系统
XinZhiZao Maintenance Inquiry System

华勤通讯 Huaqin Telecom Technology Com.,Ltd		
Title NC		
Size D	Project <Doc>	Rev V1
Date: Thursday, August 25, 2022	Sheet 29 of 55	

SIM_SD CONN

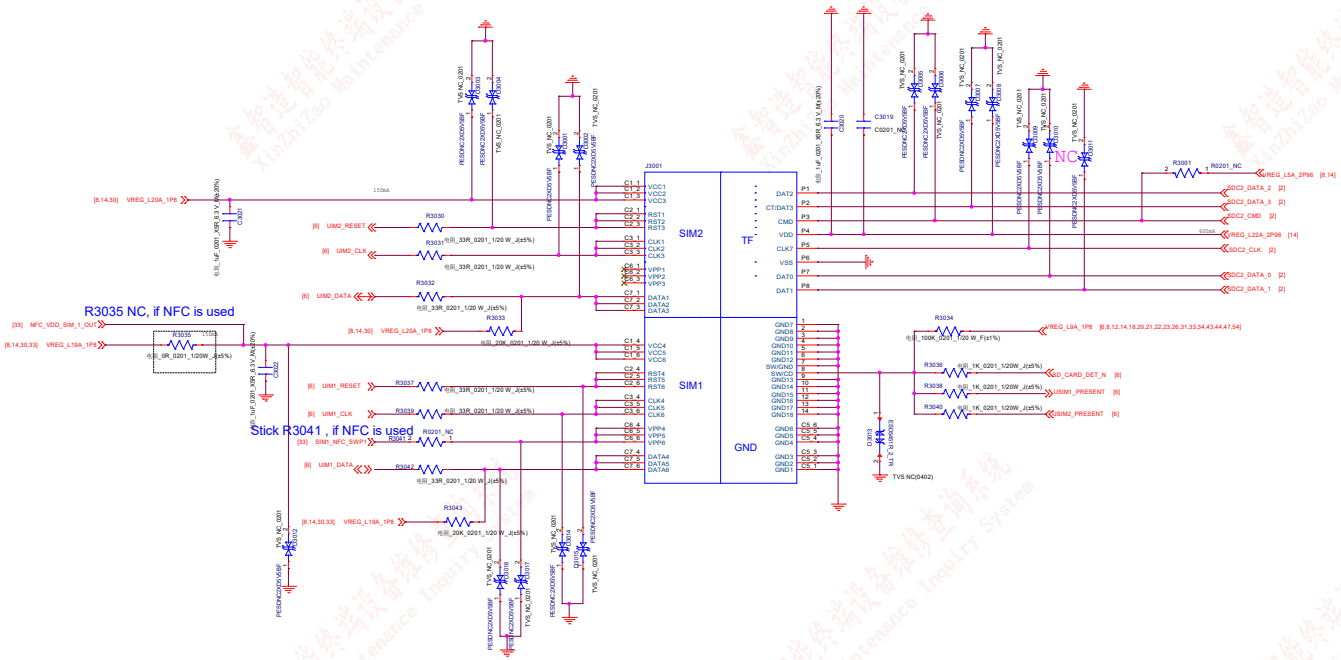

华勤通讯 Huaqin Telecom Technology Com.,Ltd		
Title	SIM_VIB_AudioJack_CONN	
Size D	Project <Doc>	Rev V1
Date: Thursday, August 25, 2022	Sheet 30 of 54	

OLED/LINK

ELVSS: -5.4~-1V; Imax:500mA
ELVDD: 4.6V; Imax:500mA
VDDI: 1.8V; Imax:200mA
VCI: 3V; Imax:150mA
VLIN: 7.6V; Imax:150mA

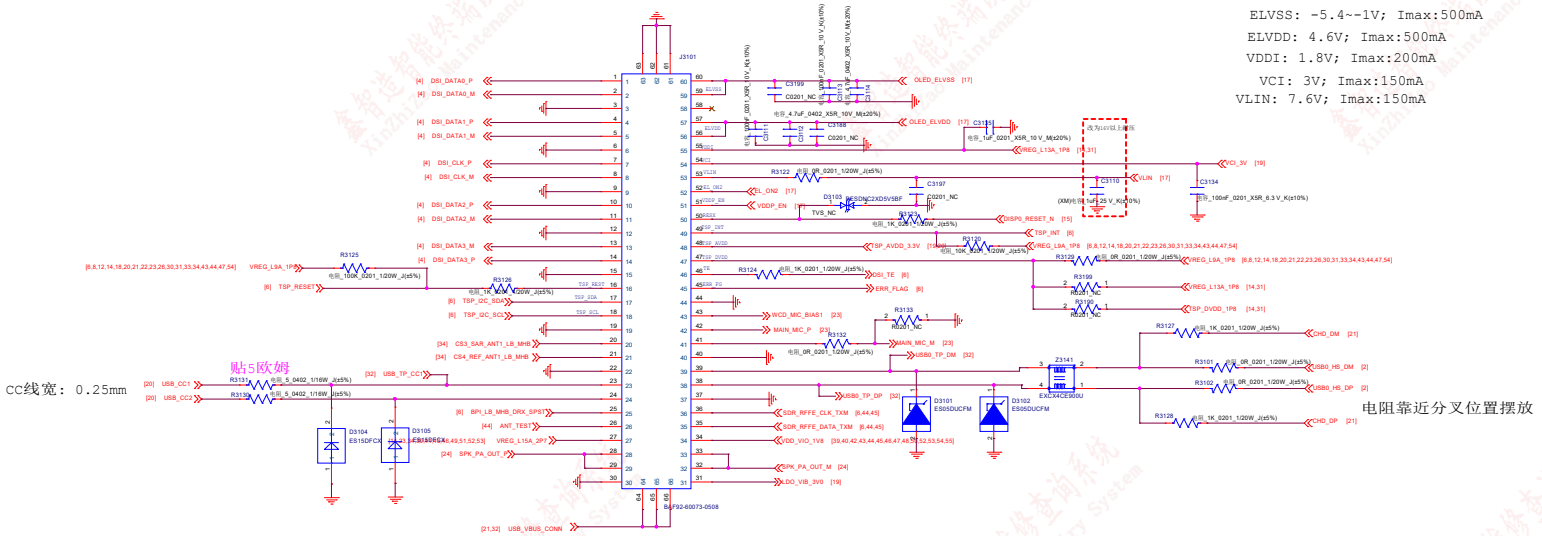

华勤通讯 Huaqin Telecom Technology Com.,Ltd		
Title 31.LINK		
Size D	Project <Doc>	Rev V1
Date: Thursday, August 25, 2022	Sheet 31 of 55	

VCHG

VBAT TEST POINT

KEYPAD

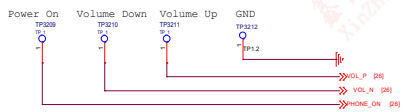

Force USB boot

Active Low

UART

JTAG

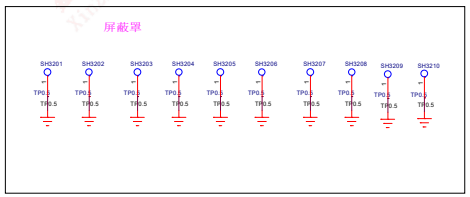

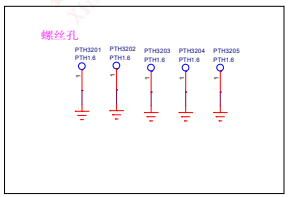

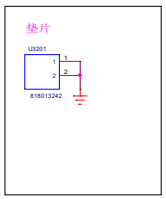

华勤通讯 Huaqin Telecom Technology Com.,Ltd		
Title	32.TEST_POINT/SHIELD	
Size D	Project <Doc>	Rev V1
Date: Thursday, August 25, 2022	Sheet 32 of 55	

鑫智造智能终端设备维修查询系统 XinZhiZao Maintenance Inquiry System

RF_NFC

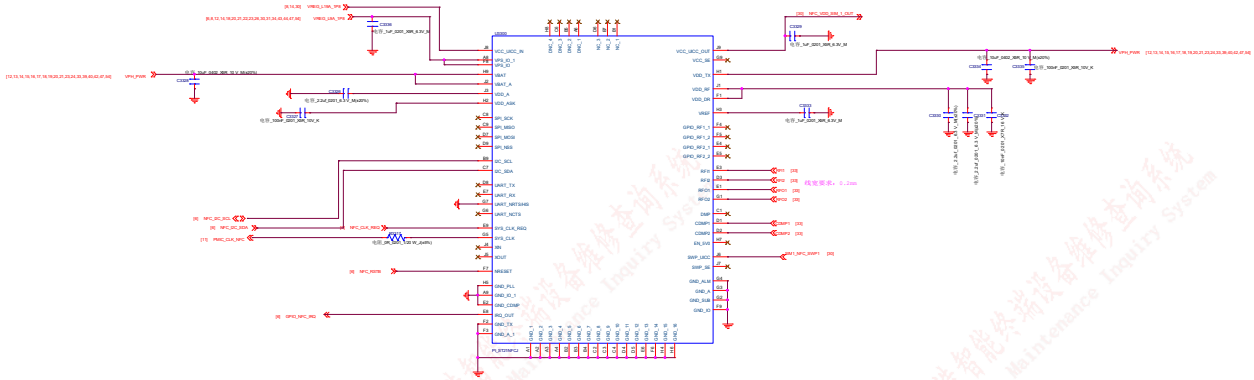

NFC 匹配位置 精度要求5%

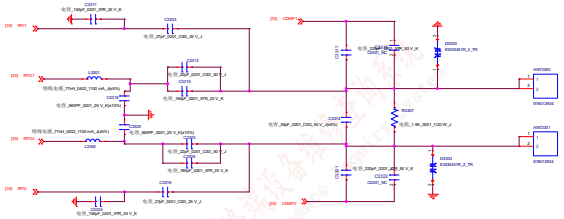

华勤通讯 Huaqin Telecom Technology Com.,Ltd		
Title RF_NFC		
Size E	Project <Doc>	Rev V1
Date: Thursday, August 25, 2022	Sheet 33 of 55	

SAR_sensor

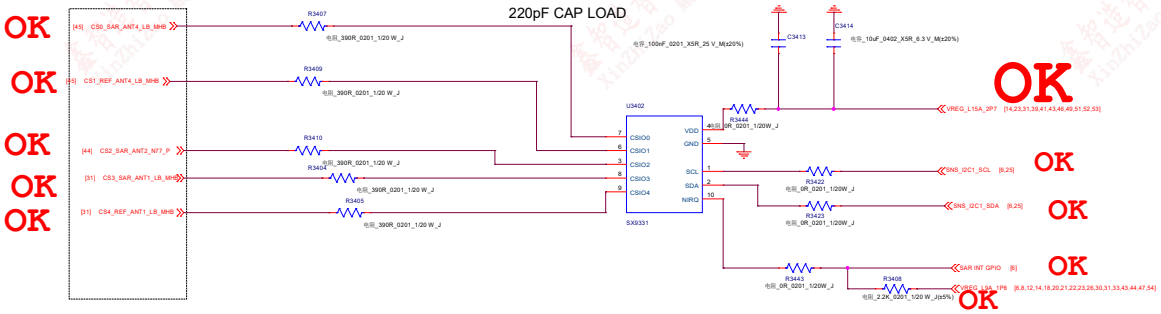

Design notice:
1) CS0_1 nets are differential pairs;
2) The width for each line,should be less than 0.1mm;
3) 0.2mm should be guaranteed between the ground and differential pairs;
4) And also, the distance between the differential line should be more than 0.2mm;
5) All the CSx nets should be protected by surrounding GND;

华勤通讯 Huaqin Telecom Technology Com.,Ltd		
Title SAR_sensor		
Size D	Project <Doc>	Rev V1
Date: Thursday, August 25, 2022	Sheet 34 of 55	

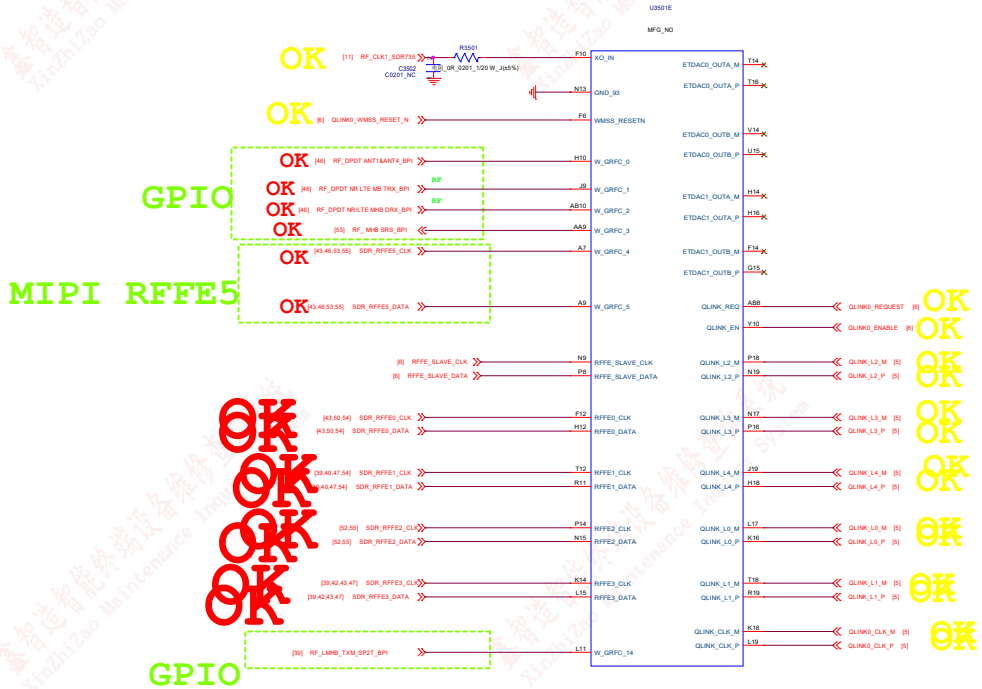

华勤通讯 Huaqin Telecom Technology Com.,Ltd		
Title SDR735_WMSS		
Size D	Project <Doc>	Rev V1
Date: Thursday, August 25, 2022	Sheet 35 of 55	

SDR735 Pwr

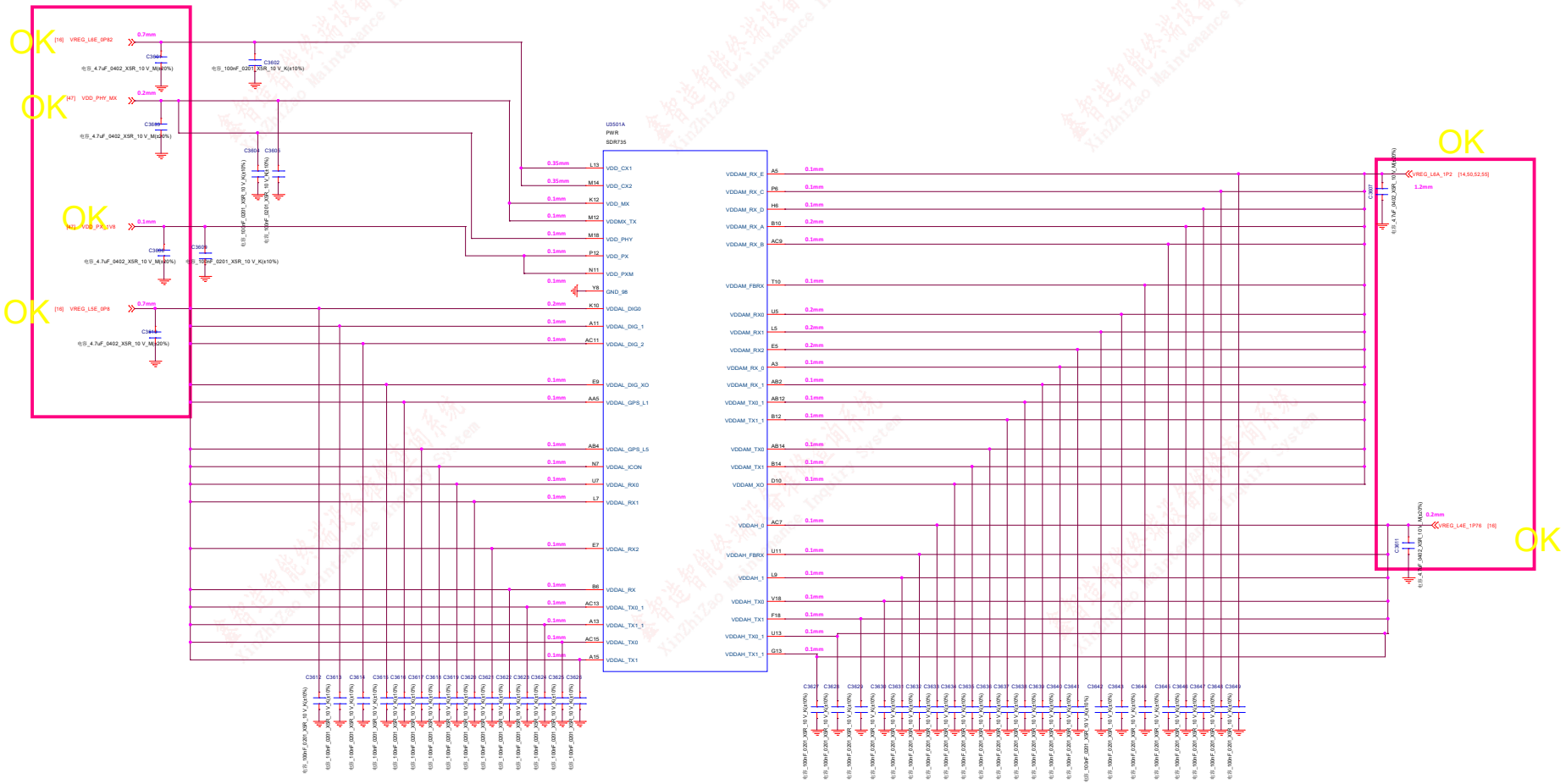

华勤通讯 Huaqin Telecom Technology Com.,Ltd		
Title SDR735_PWR		
Size D	Project <Doc>	Rev V1
Date: Thursday, August 25, 2022	Sheet 36 of 55	

SDR735 GND

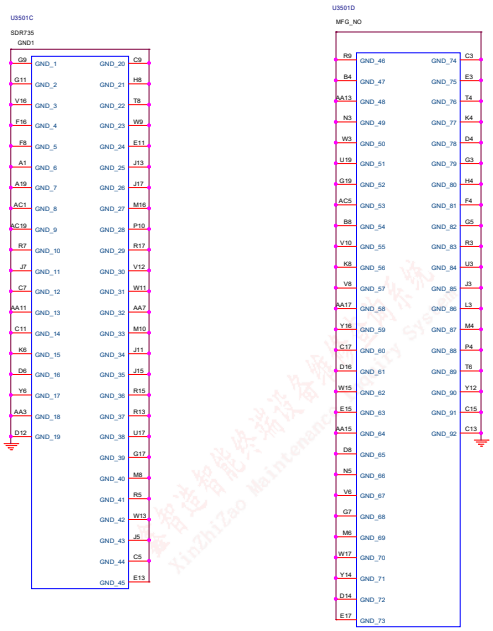

华勤通讯 Huaqin Telecom Technology Com.,Ltd		
Title SDR735_GND		
Size D	Project <Doc>	Rev V1
Date: Thursday, August 25, 2022	Sheet 37 of 55	

SDR735 RF Port

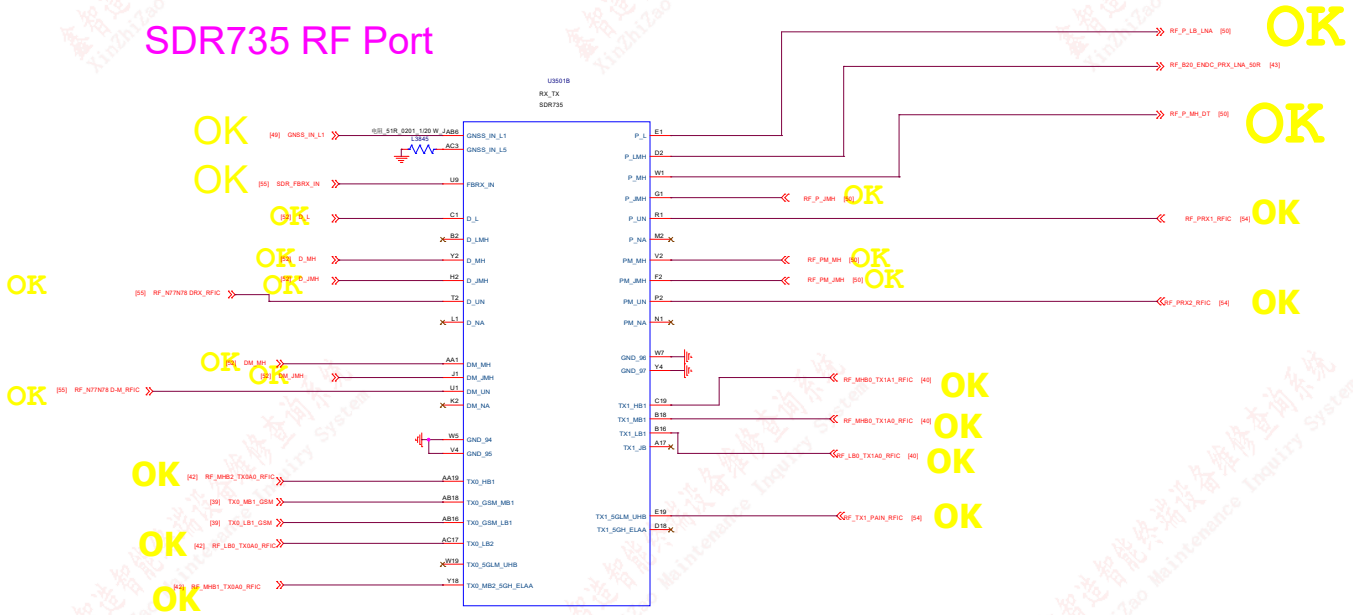

华勤通讯 Huaqin Telecom Technology Com.,Ltd		
Title: SDR735_Port		
Size: D	Project: <Doc>	Rev: V1
Date: Thursday, August 25, 2022	Sheet 38 of 55	

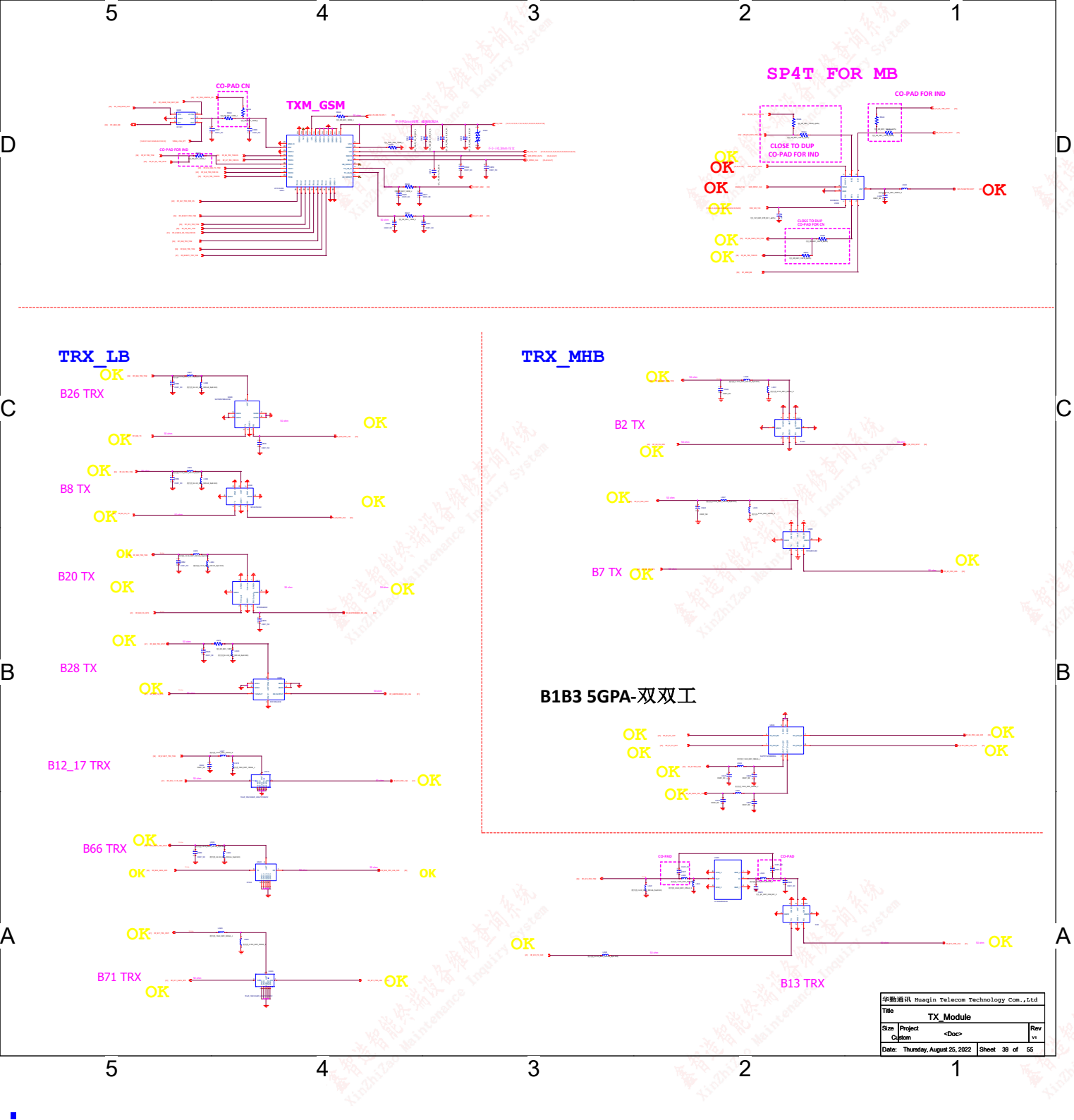

华勤通讯 Huaqin Telecom Technology Com.,Ltd			
Title	TX_Module		
Size Custom	Project <Doc>		Rev V1
Date: Thursday, August 25, 2022		Sheet 39 of 55	

鑫智造智能终端设备维修查询系统 XinZhiZao Maintenance Inquiry System

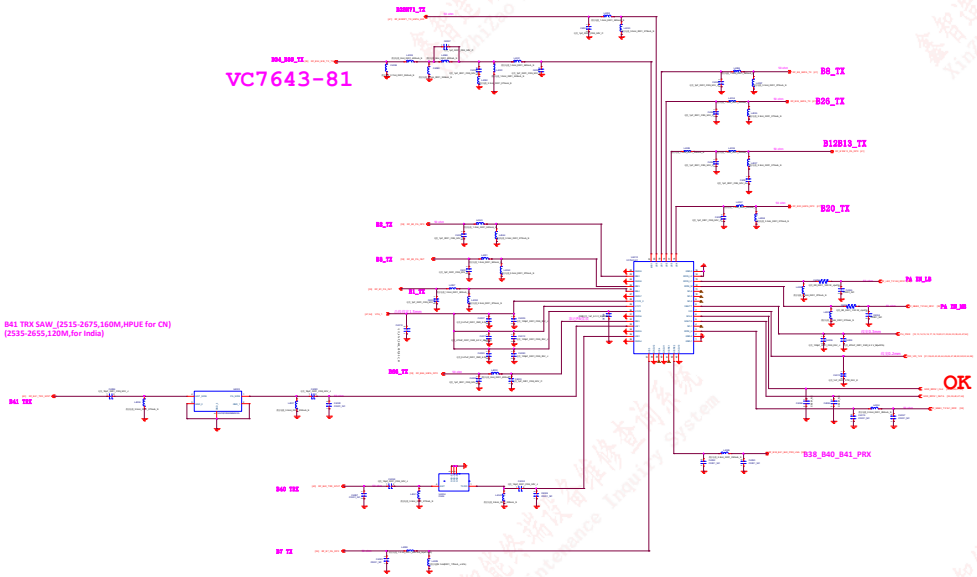

SP4T FOR B7 B40 B41 TRX

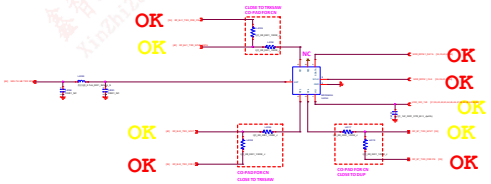

华勤通讯 Huaqin Telecom Technology Com.,Ltd		
Title	4/5G_MHB_PA_Phase5N	
Size Custom	Project <Doc>	Rev v1
Date: Thursday, August 25, 2022	Sheet 40 of 55	

SP2T FOR B12/B13 TX 5GPA

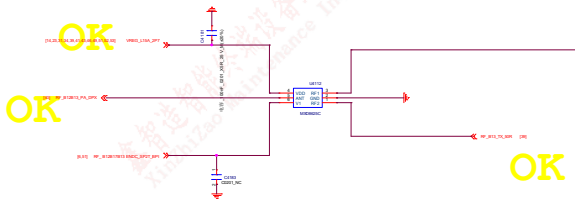

SP2T FOR B12B17 ENDC

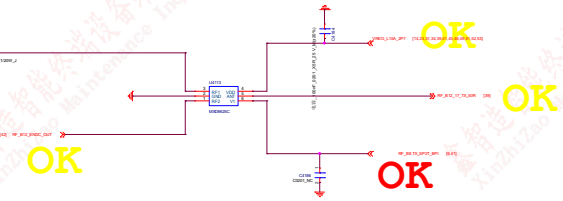

SP2T FOR B28 TX

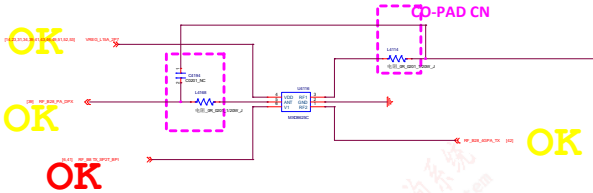

SP2T FOR B28N71 TX

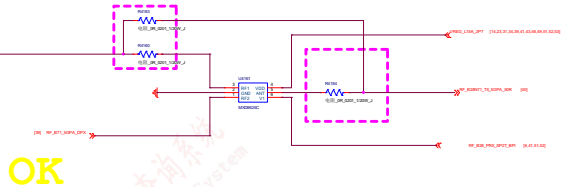

SP2T FOR B8 TX

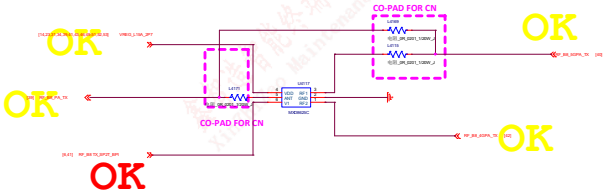

SP2T FOR B20_5GPA

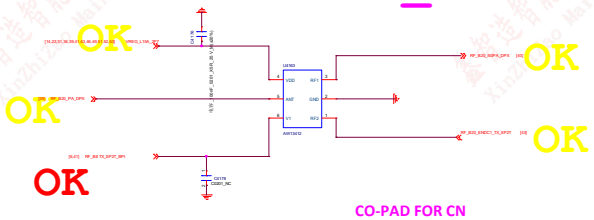

SP2T FOR B26(B5B18B19W6) TX

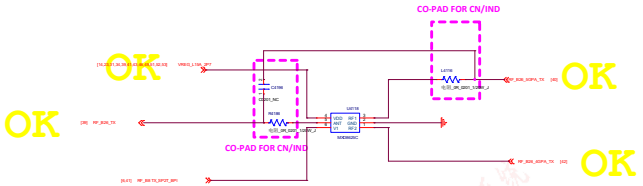

SP2T FOR B28N71 ANT TO TXM

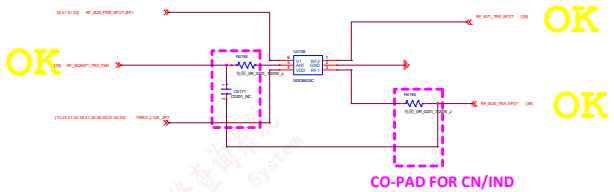

华勤通讯 Huaqin Telecom Technology Com.,Ltd		
Title NC_FBRX		
Size E	Project <Doc>	Rev V1
Date: Thursday, August 25, 2022	Sheet 41 of 55	

RR88643-21E_MMMB PA_MB ENDC

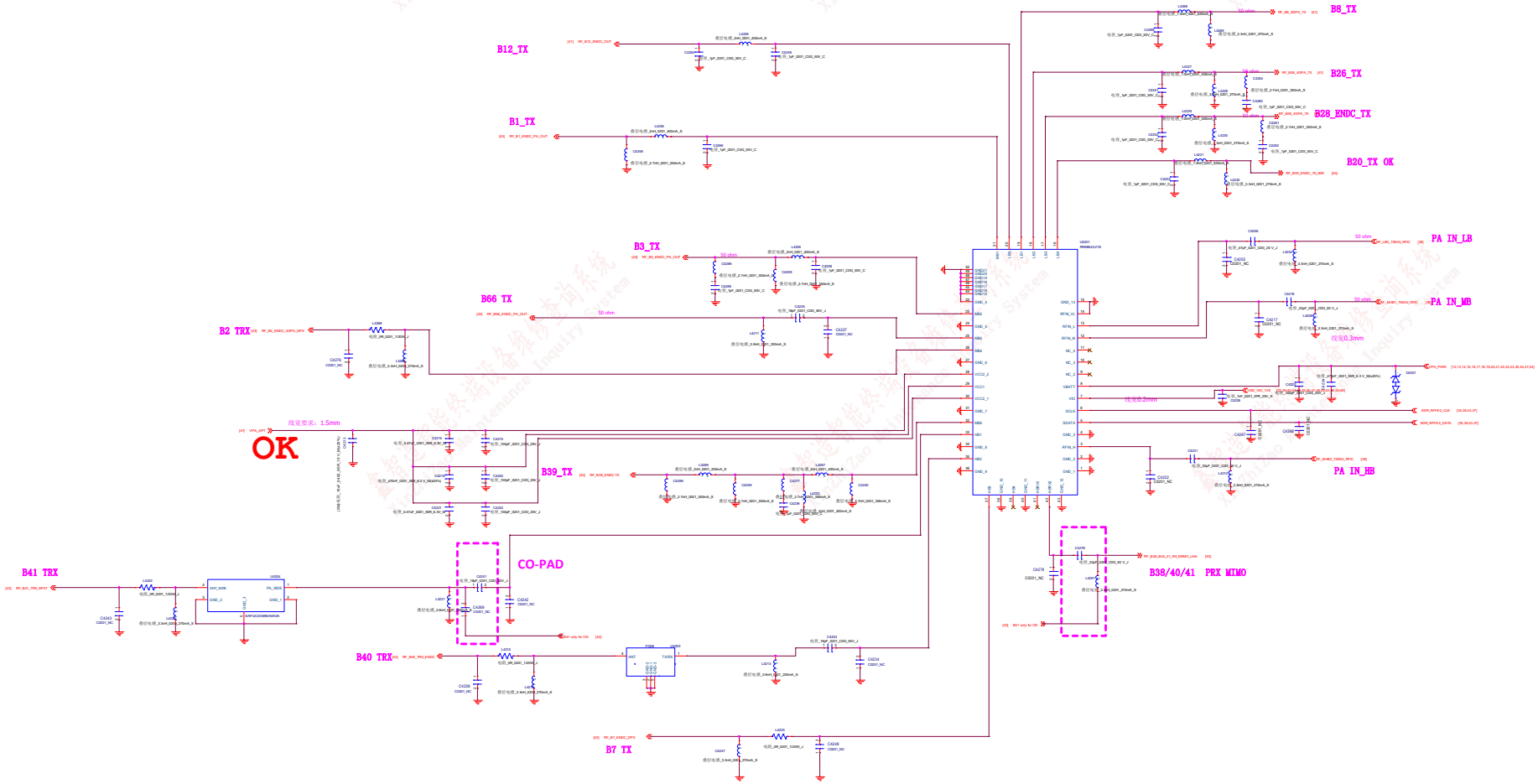

华勤通讯 Huaqin Telecom Technology Com.,Ltd		
Title	MMMB PA_MB ENDC	
Size E	Project <Doc>	Rev V1
Date: Thursday, August 25, 2022	Sheet 42 of 55	

HB

MXD8648_SP4T FOR HB

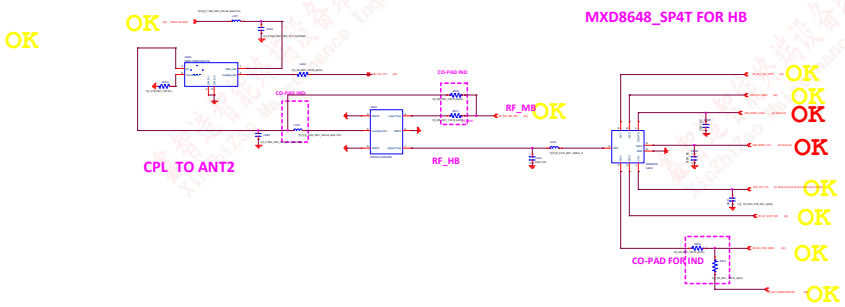

SP2T FOR B20 ENDC TX CN/IND NC

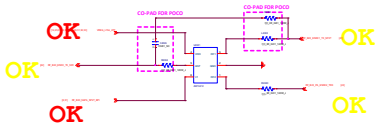

MB

MXD8648_SP4T FOR MB

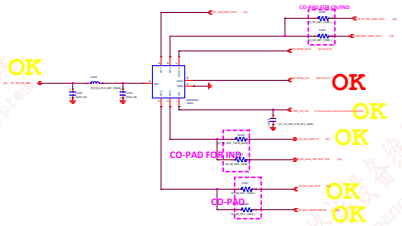

B2 ENDC TX

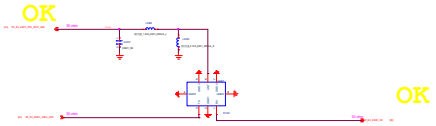

B7 TRX

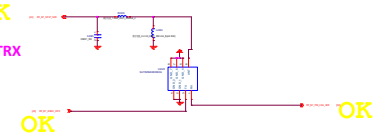

B1B3 ENDC-双双工

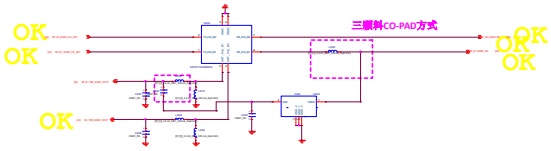

B20 TRX ENDC

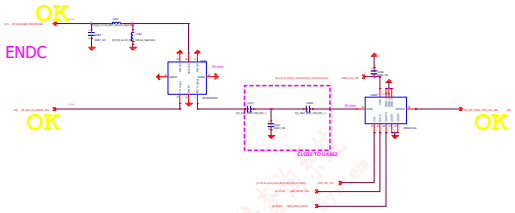

B66 TRX

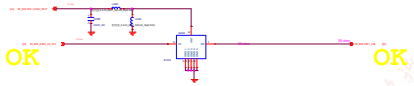

华勤通讯 Huaqin Telecom Technology Com.,Ltd			
Title: MMMB PA_VC7643_ENDC_MHB_TRX			
Size: Custom	Project: <Doc>		Rev: V1
Date: Thursday, August 25, 2022	Sheet 43 of 55		

鑫智造智能终端设备维修查询系统 XinZhiZao Maintenance Inquiry System

ANT1（LB_MHB_P）to 小板

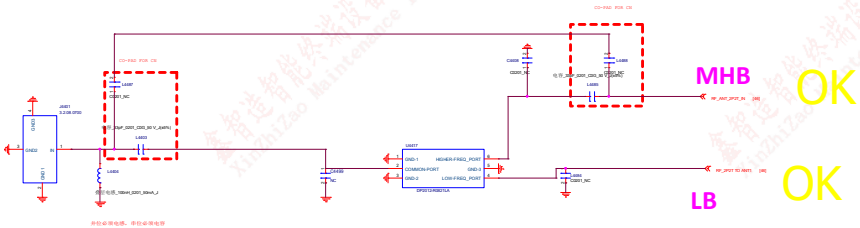

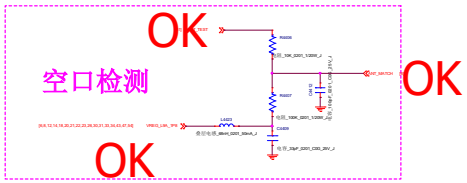

ANT2（MHB_PM/N77_PRX_MIMO）

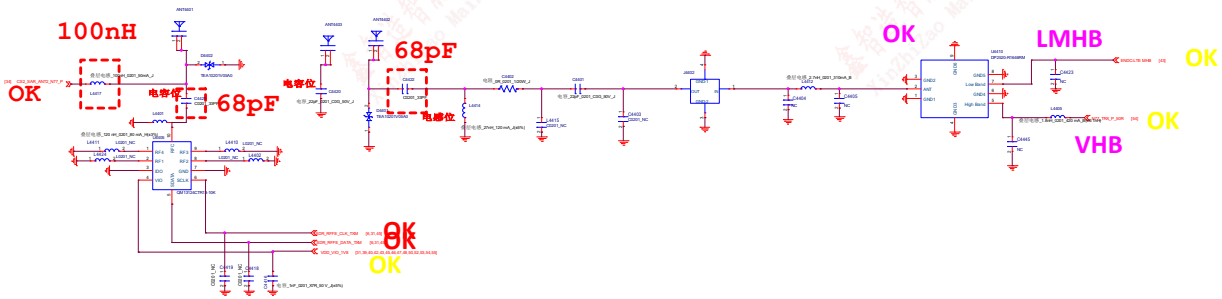

ANT3（N77_PRX）

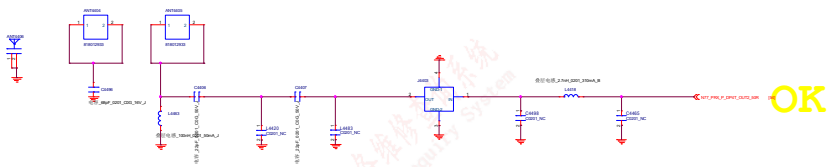

华勤通讯 Huaqin Telecom Technology Com.,Ltd		
Title ANT_P_PM		
Size E	Project <Doc>	Rev V1
Date: Thursday, August 25, 2022	Sheet 44 of 55	

ANT4（LB_MHB_P）

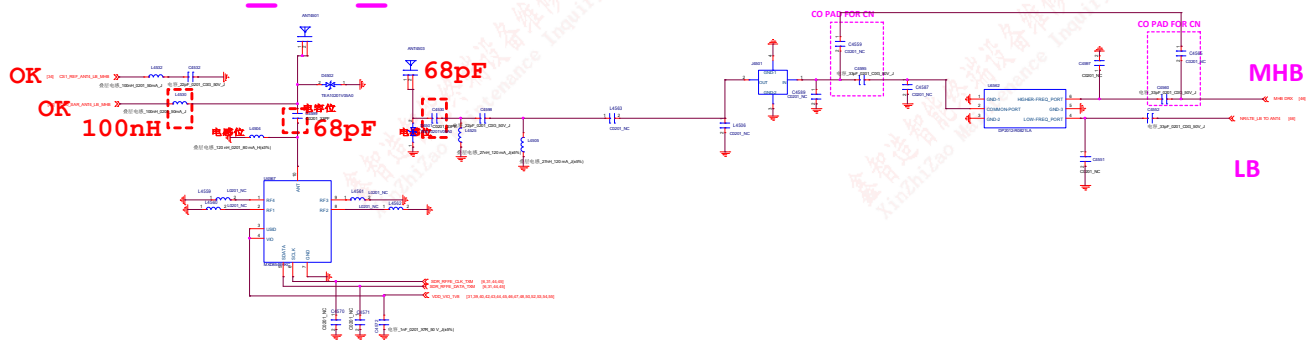

ANT5（MHB_DM/N77_D）

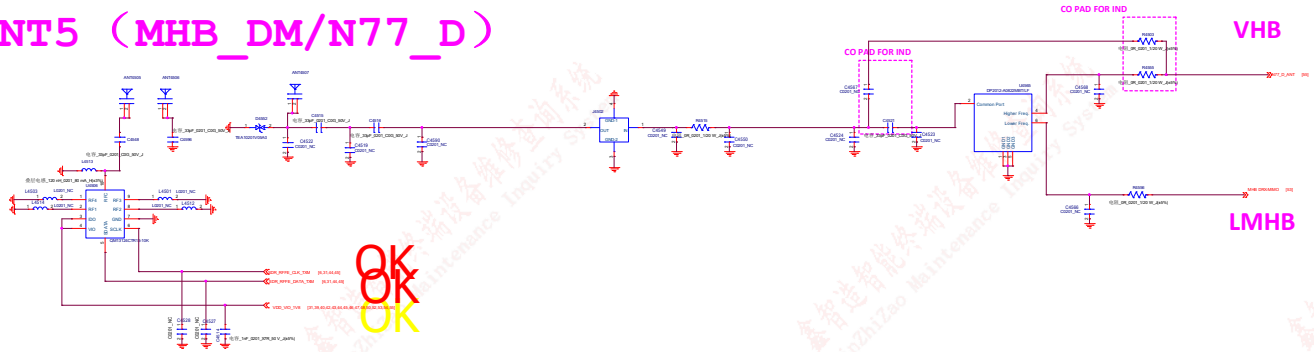

ANT6（N77_DM_HB_DRX）to 小板

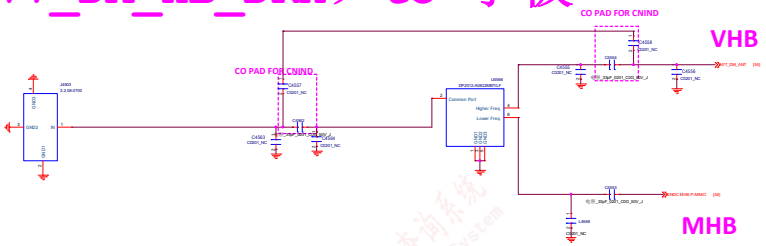

接地弹片

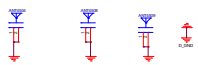

华勤通讯 Huaqin Telecom Technology Com.,Ltd		
Title	ANT_D_DM	
Size E	Project <Doc>	Rev V1
Date: Thursday, August 25, 2022	Sheet 45 of 55	

鑫智造智能终端设备维修查询系统 XinZhiZao Maintenance Inquiry System

TO ANT1&ANT4

DPDT ANT1&ANT4

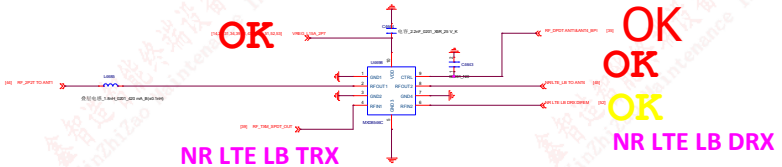

TO ANT4

DPDT LTE/NR MHB TRX

NR LTE MB TRX

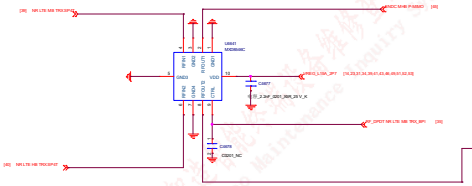

NR LTE HB DRX

CPL FOR MB

CO-PAD CN

OK

DPDT NR/LTE MHB DRX

NR LTE LB TRX

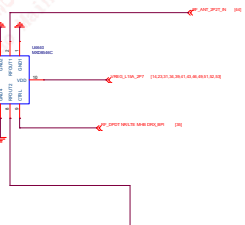

CO-PAD CN

CO-PAD CN

NR LTE LB DRX

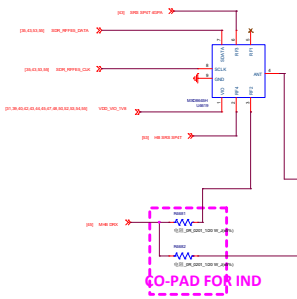

CO-PAD FOR IND

CO-PAD FOR IND

SP4T FOR SRS

华勤通讯 Huaqin Telecom Technology Com.,Ltd		
Title: common-dip-saw		
Size: E	Project: <Doc>	Rev: V1
Date: Thursday, August 25, 2022	Sheet 46 of 55	

QET4101

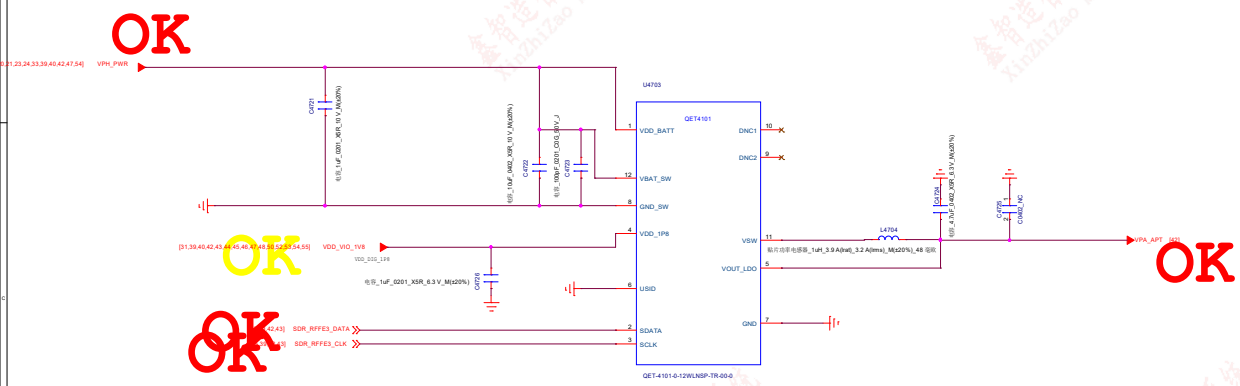

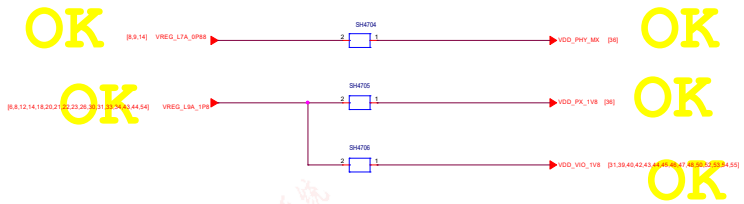

QET6105

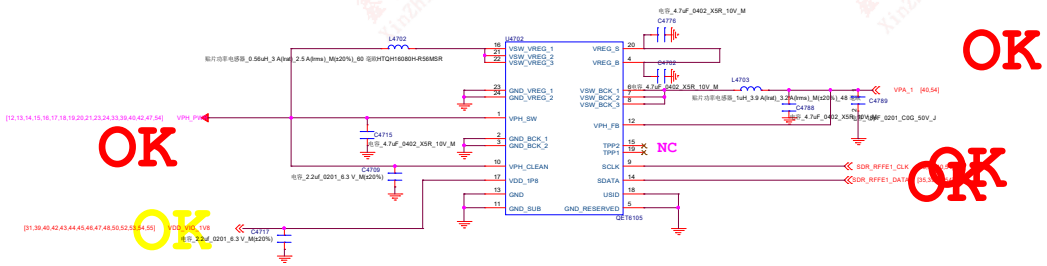

华勤通讯 Huaqin Telecom Technology Com.,Ltd		
Title QFE5100		
Size D	Project <Doc>	Rev V1
Date: Thursday, August 25, 2022	Sheet 47 of 55	

WCN3988

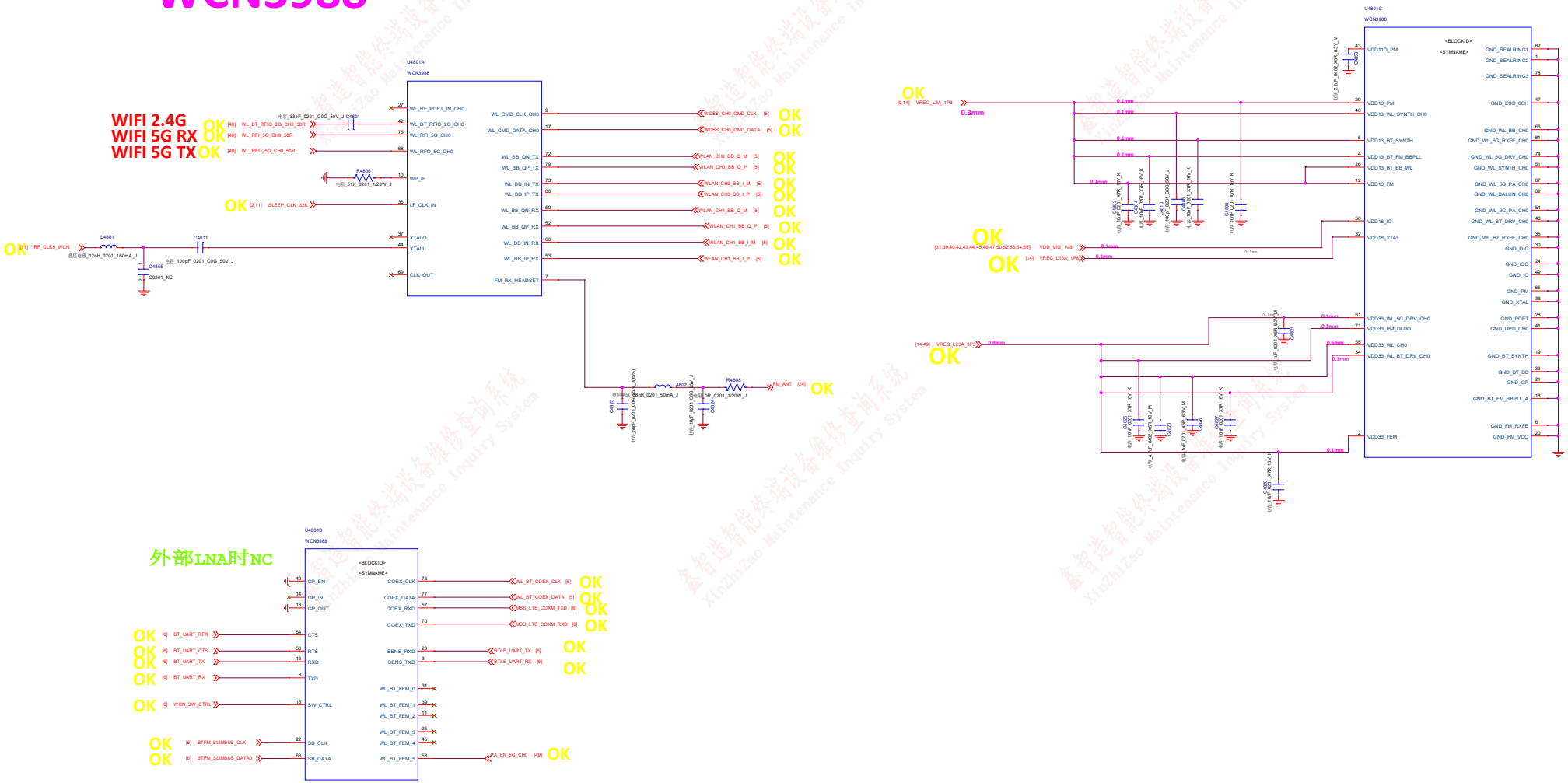

华勤通讯 Huaqin Telecom Technology Com.,Ltd		
Title: WCN3988		
Size: D	Project: <Doc>	Rev: V1
Date: Thursday, August 25, 2022	Sheet 48 of 55	

ANT7
WiFi 2.4G & 5G_GPS

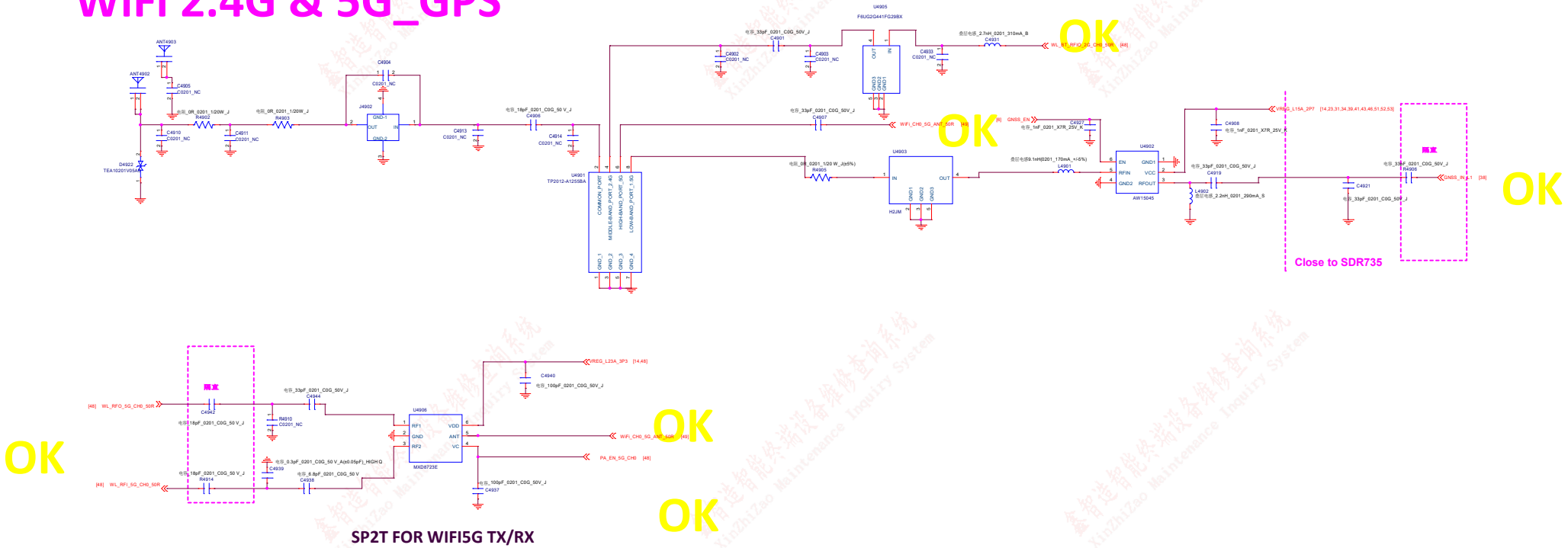

华勤通讯 Huaqin Telecom Technology Com.,Ltd		
Title GPS/WIFI_2.4G_5G/BT		
Size D	Project <Doc>	Rev V1
Date: Thursday, August 25, 2022	Sheet 49 of 55	

PRX_QLN5030_LNA BANK

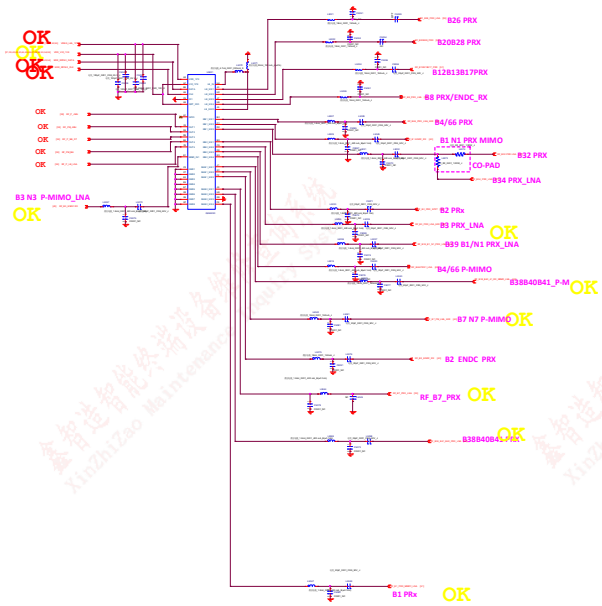

华勤通讯 Huaqin Telecom Technology Com.,Ltd		
Title	4/5G_MHB_PA_Phase5N	
Size Custom	Project <Doc>	Rev V1
Date: Thursday, August 25, 2022	Sheet 50 of 55	

B32 PRX(GLB ONLY)

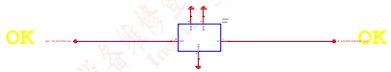

SP2T FOR B34B39 PRX

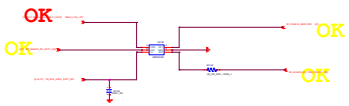

SP2T FOR B32 PRX

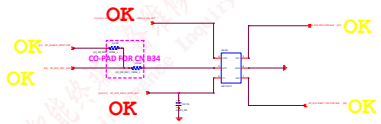

SP2T FOR B1P-MIMO

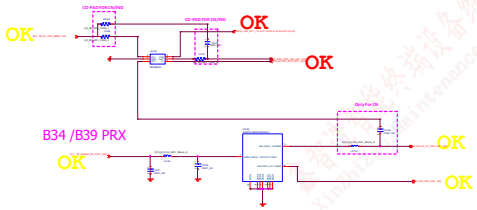

B34B39 PRX SAW

SP2T FOR B12B13 PRX

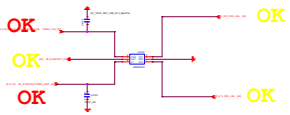

SP2T FOR B20_B28N71 ENDC PRX

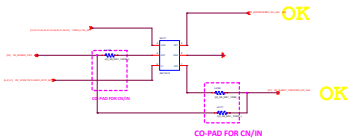

SP2T FOR B28B71 PRX

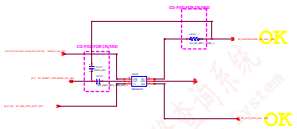

华勤通讯 Huaqin Telecom Technology Com.,Ltd			
Title	PM-ASM-filter		
Size	Project		Rev
Custom	<Doc>		v1
Date: Thursday, August 25, 2022		Sheet 51 of 55	

鑫智造智能终端设备维修查询系统 XinZhiZao Maintenance Inquiry System

DRX_QLN5030_LNA BANK

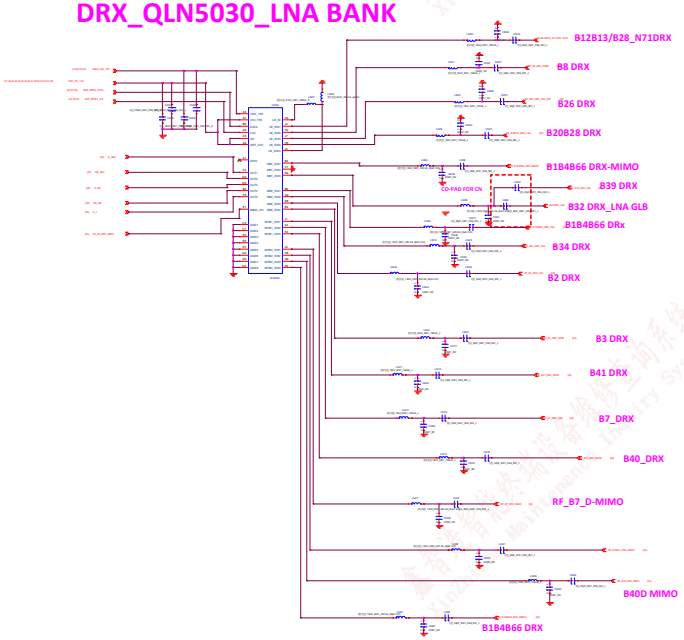

DRX_SFMRAT0L001_DIFIM

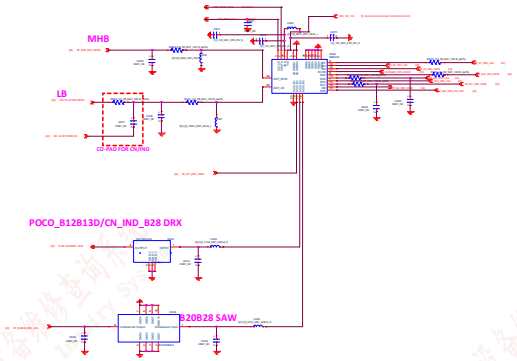

SP2T FOR B26N71 DRX

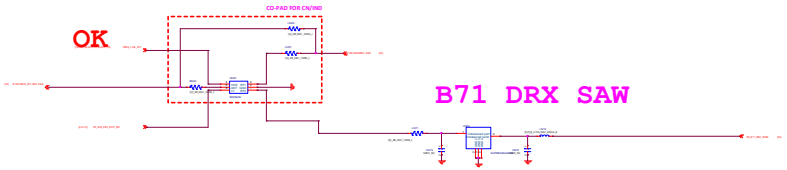

华勤通讯 Huaqin Telecom Technology Com.,Ltd		
Title	MXD98E2DA_VC3725	
Size Custom	Project <Doc>	Rev V1
Date: Thursday, August 25, 2022	Sheet 52 of 55	

鑫智造智能终端设备维修查询系统 XinZhiZao Maintenance Inquiry System

DRX_MIMO

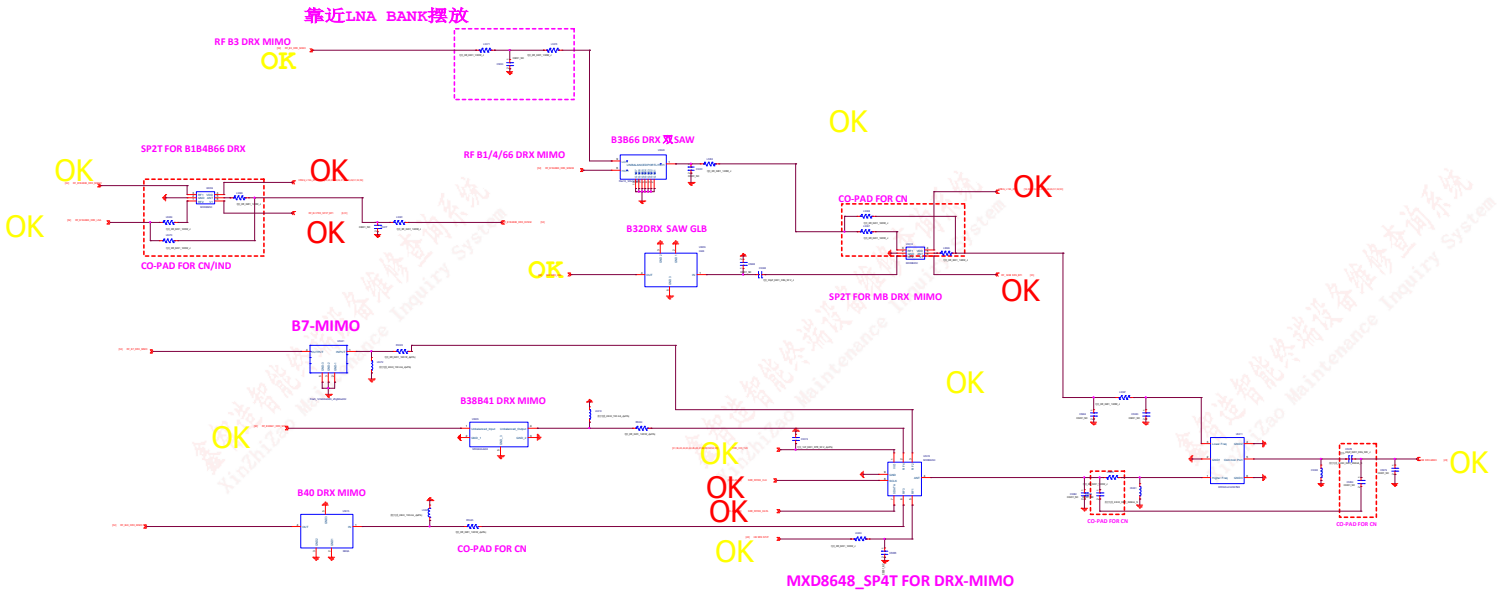

华勤通讯 Huaqin Telecom Technology Com.,Ltd		
Title	MXD98E2DA_VC3725	
Size Custom	Project <Doc>	Rev V1
Date: Thursday, August 25, 2022	Sheet 53 of 55	

N77/78_TRX0_VC7537M

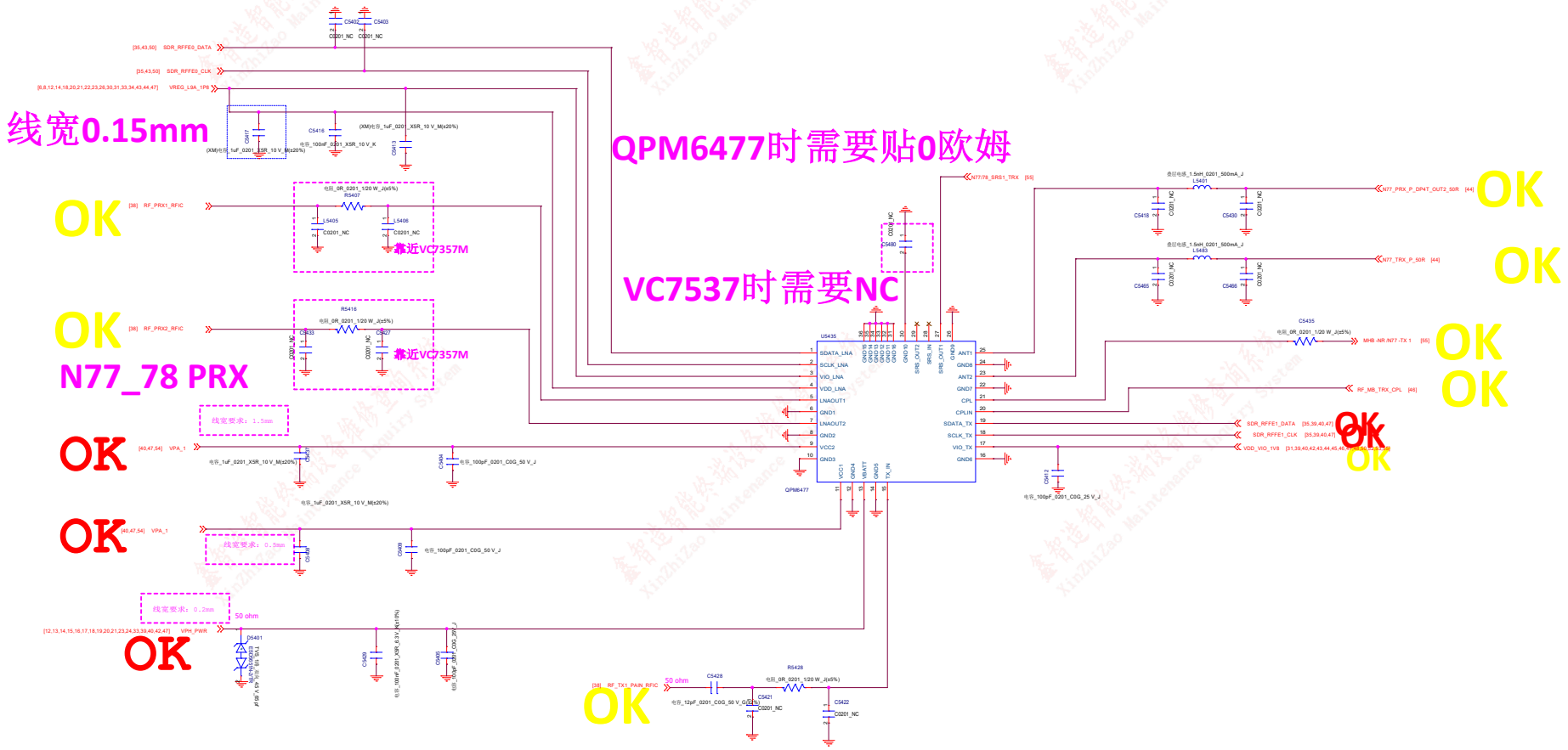

华勤通讯 Huaqin Telecom Technology Com.,Ltd		
Title N77/78_TRX0_VC7530M		
Size D	Project <Doc>	Rev V1
Date: Thursday, August 25, 2022	Sheet 54 of 55	

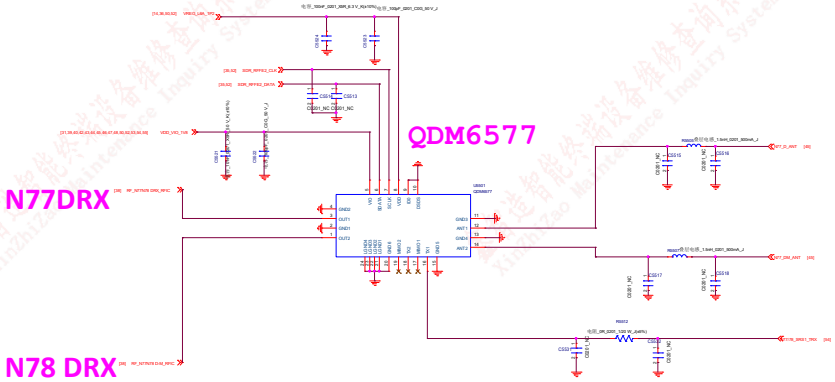

VC1624_SP4T FOR FBRX

华勤通讯 Huaqin Telecom Technology Com.,Ltd		
Title VC3726		
Size E	Project <Doc>	Rev V1
Date: Thursday, August 25, 2022	Sheet 55 of 55	